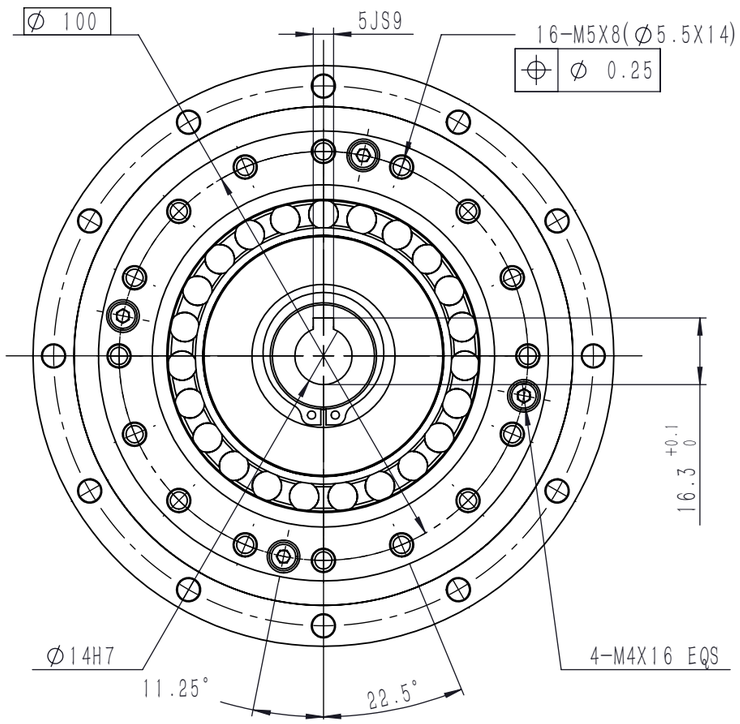

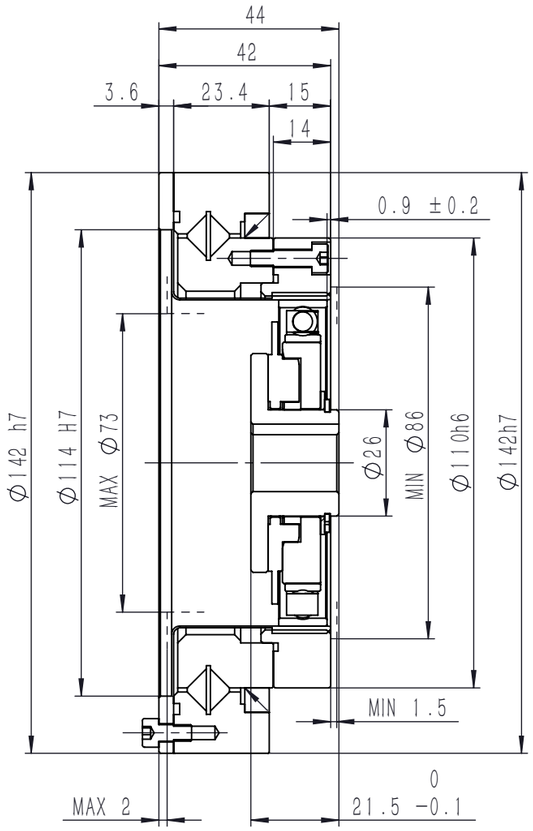

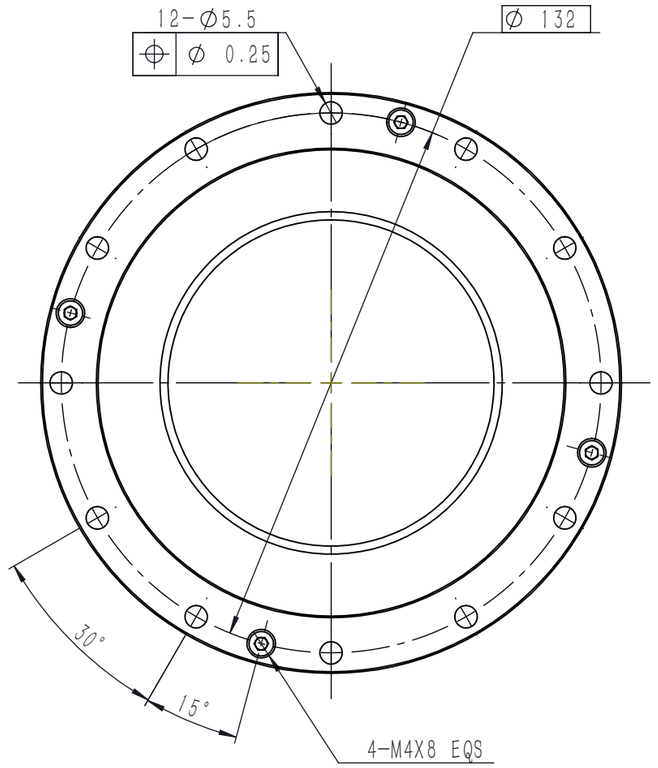

Specification:

Model	Reduction ratio	Rated torque at input 2000r/min (Nm)	Permissible peak torque at start/stop (Nm)	Permissible max. value of ave. load torque (Nm)	Instantaneous permissible max. torque (Nm)	Permissible max. input rotational speed (r/min)	Permissible ave. input rotational speed (r/min)	Back clearance (arc sec)	Transmission accuracy (arc sec)
								≤	≤
32	120	160	413	253	803	4500	3500	10	60

HMHS-32-120-II

Han's Motion