FENAC Automation Control

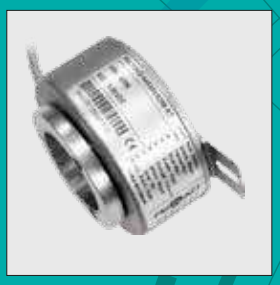

www.fenac.com.tr

- ENCODERS
- SENSORS
- MOTORFEEDBACK

Motion Control Products 2020

Welcome
to the world of quality encoders

The company Fenac was founded in 2002 with 20 years industry and production experience in the industrial automation market. Fenac Engineering defined and positoned itself as a global producer of motion control and feedback devices. For that purpose company enlarge the product range day by day according to customer and market requirements.

Fenac's initial aim is to produce high quality, leading-edge and competitive motion control products for different tasks and applications like all kind of industrial machines, iron-steel motors, different model and type elevator motors, machine tools, weighscales, conveyors, printing machines, drives, textile machines, production lines, injection - moulding machines, test machines, elevators/lifts, door and gates.

As a result of aiming high quality motion control products, Fenac has the following products in the product range;

- Optical Incremental Encoders
- Optical Absolute Encoders
- Magnetic Incremental Encoders
- Magnetic Absolute Encoders
- Draw Wire Units - Wire Actuated Encoders
- Magnetic Linear Encoders
- Encoder With Analog Outputs
- Heavy Duty Encoders
- Linear Solutions
- Rotary Potantiometers
- Textile Solutions

Motion Control Products

Table of contents

Incremental encoders 05-56

Linear encoders & solutions 149-156

Programmable encoders 57-62

Bearingless encoders 157-170

Heavy duty encoders 63-72

Draw wire sensors 171-178

Absolute encoders standard 73-106
- SSI
- BISS
- PARALLEL
- CANopen
- SSI/BISS+SinCos

Textile solutions 179-188

Rotary potantiometers 189-192

Absolute encoders bus cover 107-116
- CANopen
- Profibus

Sensors & Door Detectors 193-198

Motor feedback encoders 117-138

Hand encoders 199-200

Accessories 201-208

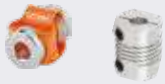

Absolute analog encoders 139-148
- MT Analog
- ST Analog
- Tacho out Analog

Technical 209-212

Applications and Solutions

Packaging Machines

Iron & Steel Industry Applications

Position Measurement for
Industrial Cranes

Lift Application

Paper and Pulp Industry

Wind Turbine Applications

Incremental encoders

- **Robust**
- **Reliable**

Motion Control Products

FNC 16S Series, 16 mm Housing, Micro Encoders

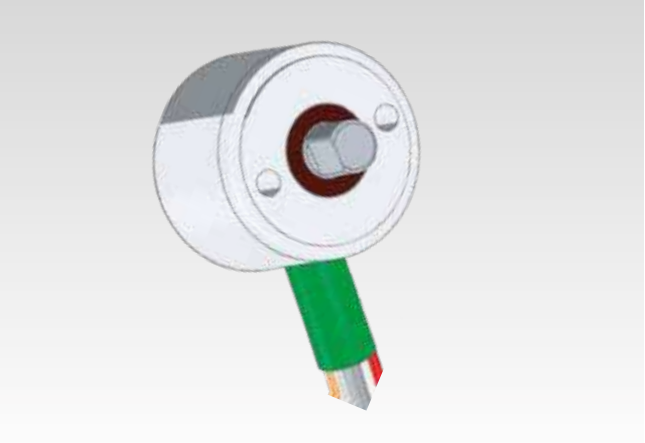

Features

- **Industry 16 mm special size, servo flange**
- **Robust mechanical and electrical construction**
- **Protection up to IP67**
- **Up to 1024 PPR max.**
- **<300 kHz frequency**

PPR Options :

1 to 1024 All PPR, 2048, 4096

Technical data - electrical ratings

Voltage supply	4.75VDC to 30VDC 4.75VDC to 5.5VDC
Protection:	Output short circuit protection. Reverse polarity protection (except 5V version)
Consumption w/o load	≤30 mA (24 VDC)
Resolution (steps/turn)	1...1024
Reference signal	Zero pulse, width 90° 180°, 360° optional
Optoelectronic life time	100.000 (min)
Output frequency	>200 kHz
Output signals	90° shifted A and B, Z + inverted
Output circuit	Linedriver/RS422 Push-pull short-circuit proof NPN Open Collector
Interference immunity	DIN EN 61000-6-2
Emitted interference	DIN EN 61000-6-4
Approval	CE

Technical data - mechanical design

Dimensions (flange)	ø16 mm
Shaft loading	≤20 N axial ≤30 N radial
Protection DIN EN 60529	IP54, IP65
Operating speed	≤10000 rpm
Starting torque	≤0.01 Nm (IP 67)
Materials	Housing: Aluminium Flange: Aluminium Shaft : Stainless steel
Shaft Diameter:	up to 4 mm
Bearings lifetime:	$2x10^9$ rev. at 100% of full rated shaft load (minimum)
Operating temperature	-20...+85 °C
Storage temperature	-30 °C up to +90 °C
Weight approx.	130 g

Accessories

Connectors and cables
CRM1204 M12 4 poles female connector or see page 206

Mounting coupling
SK240606 plastic or see page 204

Mounting accessories
YY RST Spring or see page 202-203

FNC 16S Series, 16 mm Housing, Micro Encoders

Mechanical Dimensions

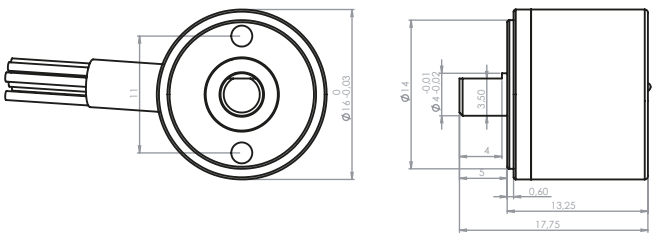

Pulse Diagram

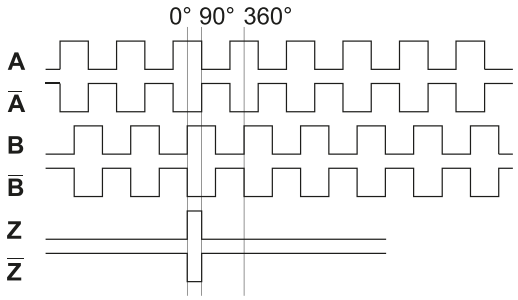

Connector Wiring

Connector Type	+Vcc	GND	A	A'	B	B'	Z	Z'	Shield
CRM1204	1	2	3		4				o.r.
CRM1205	1	2	3		4		5		o.r.
CRM1208	1	2	3	6	4	7	5	8	o.r.
CRM1212	1	2	3	6	4	7	5	8	o.r.
CRM1607	1	2	3		4		5		o.r.
CRM1614	Customer Specific								o.r.

For further information please see page 206

Cable Wiring

Function	Color	Renk	Explanation
+VB	Brown	Kahve	Supply Voltage
GND	White	Beyaz	Ground
A	Green	Yeşil	A Channel
A'	Red	Kırmızı	A Inverted Channel
B	Yellow	Sarı	B Channel
B'	Pink	Pembe	B Inverted Channel
Z	Gray	Gri	Z Channel
Z'	Blue	Mavi	Z Inverted Channel
Shield	Black	Siyah	Shield

Encoder Part Number

FNC | 16 | S | M | 4 | 6 | 30V | 1024 | – | R2

Housing:
16 : 16mm

Flange Type:
S : Clamping Flange

O : Optical
M : Magnetic

Shaft diameter : up to 4 mm

Output Channels
1 : A
2 : AB
3 : ABZ
4 : AB+A' B'
6 : ABZ+A' B' Z'

Electrical Connections:

Cable
R2 : radial 2m, shield not connected (standart)
A2 : axial 2m, shield not connected (standart)

Connector:

R1204	R1212
R1205	R1607
R1208	R1614

PPR Options :

1 to 24 - 64 - 128 - 256- 512 - 1024 ppr

Supply Voltage and output circuit :
5V : 5V in / out
245V : 5-30V in 5V out
30V : 5-30V in / out

FNC 24S / 24E Series, 24 mm Housing, Micro Encoders

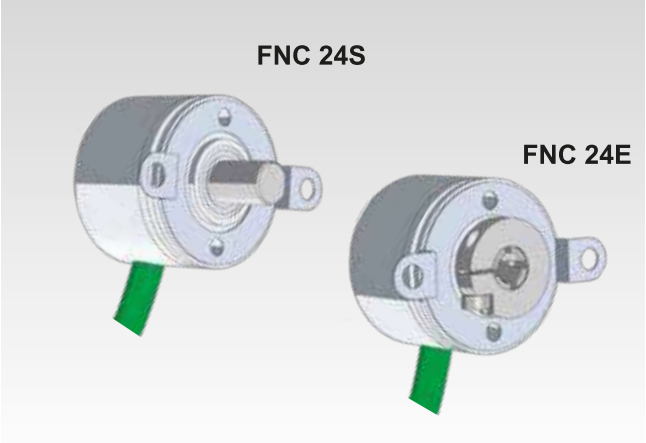

Features

- **Industry 24 mm special size, servo flange and clamp flange**
- **Robust mechanical and electrical construction**
- **Protection up to IP67**
- **Up to 4096 PPR max.**
- **<300 kHz frequency**

PPR Options :

1 to 1024 All PPR- 2048 - 4096

Technical data - electrical ratings

Voltage supply	4.75VDC to 30VDC 4.75VDC to 5.5VDC
Protection:	Output short circuit protection. Reverse polarity protection (except 5V version)
Consumption w/o load	≤30 mA (24 VDC)
Resolution (steps/turn)	1...4096
Reference signal	Zero pulse, width 90° 180°, 360° optional
Optoelectronic life time	100.000 (min)
Output frequency	>200 kHz
Output signals	90° shifted A and B, Z + inverted
Output circuit	Linedriver/RS422 Push-pull short-circuit proof NPN Open Collector
Interference immunity	DIN EN 61000-6-2
Emitted interference	DIN EN 61000-6-4
Approval	CE

Technical data - mechanical design

Dimensions (flange)	ø24 mm
Shaft loading	≤20 N axial ≤30 N radial
Protection DIN EN 60529	IP54, IP65
Operating speed	≤10000 rpm
Starting torque	≤0.01 Nm (IP 67)
Materials	Housing: Aluminium Flange: Aluminium Shaft : Stainless steel
Shaft Diameter:	24E shaft up to 5 mm 24S shaft up to 6 mm
Bearings lifetime:	$2x10^9$ rev. at 100% of full rated shaft load (minimum)
Operating temperature	-20...+85 °C
Storage temperature	-30 °C up to +90 °C
Weight approx.	130 g

Pulse Diagram

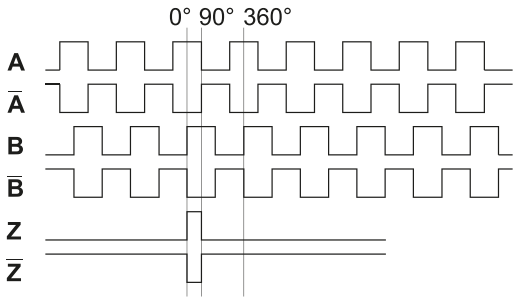

Accessories

Connectors and cables
CRM1204 M12 4 poles female connector or see page 206

Mounting coupling
SK240606 plastic or see page 204

Mounting accessories
YY RST Spring or see page 202-203

FNC 24S / 24E Series, 24 mm Housing, Micro Encoders

Mechanical Dimensions

FNC 24S

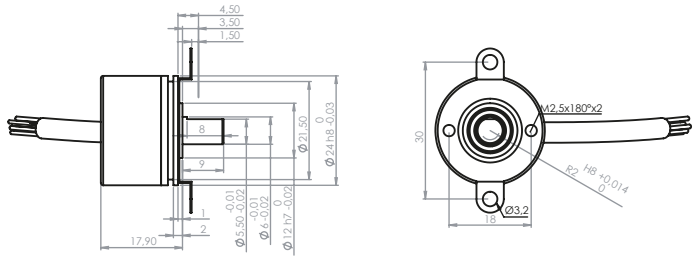

FNC 24E

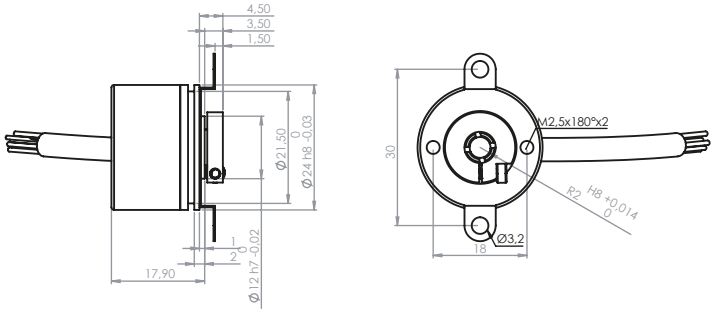

Cable Wiring

Function	Color	Renk	Explanation
+VB	Brown	Kahve	Supply Voltage
GND	White	Beyaz	Ground
A	Green	Yeşil	A Channel
A'	Red	Kırmızı	A Inverted Channel
B	Yellow	Sarı	B Channel
B'	Pink	Pembe	B Inverted Channel
Z	Gray	Gri	Z Channel
Z'	Blue	Mavi	Z Inverted Channel
Shield	Black	Siyah	Shield

Connector Wiring

Connector Type	+Vcc	GND	A	A'	B	B'	Z	Z'	Shield
CRM1204	1	2	3		4				o.r.
CRM1205	1	2	3		4		5		o.r.
CRM1208	1	2	3	6	4	7	5	8	o.r.
CRM1212	1	2	3	6	4	7	5	8	o.r.
CRM1607	1	2	3		4		5		o.r.
CRM1614	Customer Specific								o.r.

For further information please see page 206

Encoder Part Number

FNC | 24 | S | M | 6 | 6 | 30V | 1024 | – | R2

Housing:
24 : 24mm

Flange Type:
S : Clamping Flange
E : End shaft

O : Optical
M : Magnetic

Shaft diameter :
24E shaft up to 5 mm
24S shaft up to 6 mm

Output Channels
1 : A
2 : AB
3 : ABZ
4 : AB+A' B'
6 : ABZ+A' B' Z'

Electrical Connections:

Cable
R2 : radial 2m, shield not connected (standart)
A2 : axial 2m, shield not connected (standart)

Connector:
R1204 R1212
R1205 R1607
R1208 R1614

PPR Options :
1 to 256 - 512 - 1024 - 2048 - 4096 ppr

Supply Voltage and output circuit :
5V : 5V in / out
245V : 5-30V in 5V out
30V : 5-30V in / out

FNC 30S Servo Flange / 30B Clamping Flange Series

Features

- **Industry 30 mm special size, servo flange and clamp flange**
- **Robust mechanical and electrical construction**
- **Protection up to IP67**
- **Up to 2500 PPR max.**
- **<300 kHz frequency**

PPR Options :

1 to 1024 all PPR, - 360 - 500 - 512 - 720 - 1000 - 1024
1250 - 1440 - 2000 - 2048 -2500

Technical data - electrical ratings

Voltage supply	4.75VDC to 30VDC 4.75VDC to 5.5VDC
Protection:	Output short circuit protection. Reverse polarity protection (except 5V version)
Consumption w/o load	≤30 mA (24 VDC)
Resolution (steps/turn)	1...2500
Reference signal	Zero pulse, width 90° 180°, 360° optional
Optoelectronic life time	100.000 (min)
Output frequency	>200 kHz
Output signals	90° shifted A and B, Z + inverted
Output circuit	Linedriver/RS422 Push-pull short-circuit proof NPN Open Collector
Interference immunity	DIN EN 61000-6-2
Emitted interference	DIN EN 61000-6-4
Approval	CE

Technical data - mechanical design

Dimensions (flange)	ø30 mm
Shaft loading	≤20 N axial ≤30 N radial
Protection DIN EN 60529	IP54, IP65
Operating speed	≤10000 rpm
Starting torque	≤0.01 Nm (IP 67)
Materials	Housing: stainless steel Flange: stainless steel Shaft : stainless steel
Shaft Diameter:	4, 6, 8 mm (other diameters on request)
Bearings lifetime:	$2x10^9$ rev. at 100% of full rated shaft load (minimum)
Operating temperature	-20...+85 °C
Storage temperature	-30 °C up to +90 °C
Weight approx.	130 g

Pulse Diagram

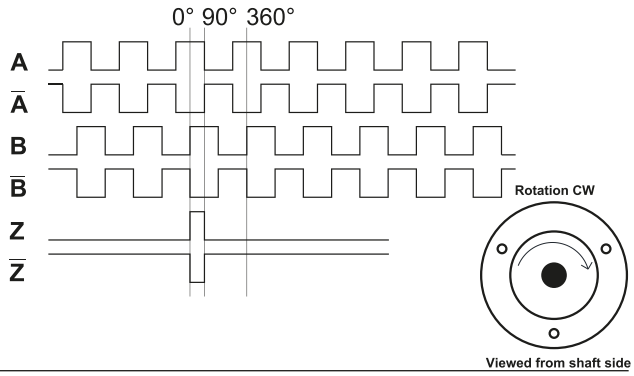

Accessories

Connectors and cables
CRM1204 M12 4 poles female connector or see page 206

Mounting coupling
SK240606 plastic or see page 204

Mounting accessories
YY RST Spring or see page 202-203

FNC 30S Servo Flange / 30B Clamping Flange Series

Mechanical Dimensions

30S

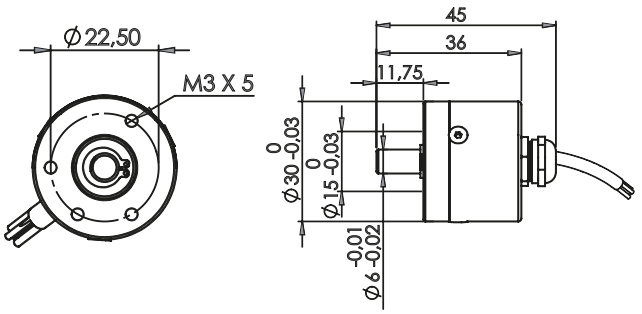

30B

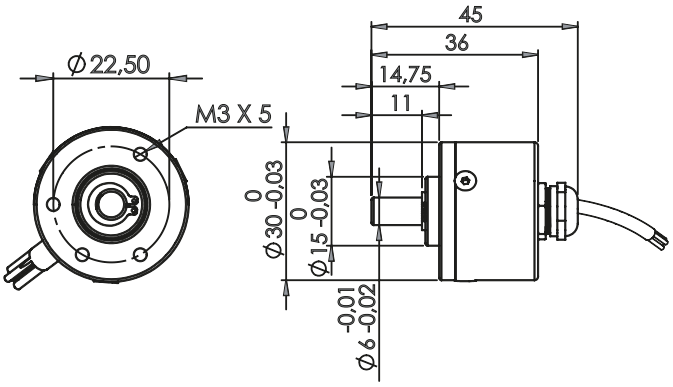

Cable Wiring

Function	Color	Renk	Explanation
+VB	Brown	Kahve	Supply Voltage
GND	White	Beyaz	Ground
A	Green	Yeşil	A Channel
A'	Red	Kırmızı	A Inverted Channel
B	Yellow	Sarı	B Channel
B'	Pink	Pembe	B Inverted Channel
Z	Gray	Gri	Z Channel
Z'	Blue	Mavi	Z Inverted Channel
Shield	Black	Siyah	Shield

Connector Wiring

Connector Type	+Vcc	GND	A	A'	B	B'	Z	Z'	Shield
CRM1204	1	2	3		4				o.r.
CRM1205	1	2	3		4		5		o.r.
CRM1208	1	2	3	6	4	7	5	8	o.r.
CRM1212	1	2	3	6	4	7	5	8	o.r.
CRM1607	1	2	3		4		5		o.r.
CRM1614	Customer Specific								o.r.

For further information please see page 206

Encoder Part Number

FNC | 30 | S | 6 | 6 | 30V | 1000 | – | R2

Housing:
30 : 30mm

Flange Type:
S : Servo flange **B :** Clamping flange

Shaft diameter : 4, 6, 8
Other dimensions on request

Output Channels
1 : A
2 : AB
3 : ABZ
4 : AB+A' B'
6 : ABZ+A' B' Z'

Electrical Connections:

Cable
R2 : radial 2m, shield not connected (standart)
A2 : axial 2m, shield not connected (standart)

Connector:
A1204 A1607
A1205 A1614

PPR Options :
1 to- 1024 all PPR, - 360 - 500 - 512 - 720 - 1000 - 1024 - 1440 - 2000 - 2048 - 2500

Supply Voltage and output circuit :
5V : 5V in / out
245V : 5-30V in 5V out
30V : 5-30V in / out

FNC 40B & 40V Series

Features

- **Industry 40 mm size, 20mm diameter clamping flange**
- **Universal 40 mm encoders**
- **Robust Mechanical and Electrical Construction**
- **Protection up to IP67**
- **Up to 4096 PPR max.**
- **<300 kHz frequency**

PPR Options :

1 to 1024 ALL PPR - 2048 - 4096

Technical data - electrical ratings

Voltage supply	4.75VDC to 30VDC 4.75VDC to 5.5VDC
Protection:	Output short circuit protection. Reverse polarity protection (except 5V version)
Consumption w/o load	≤60 mA (24 VDC)
Resolution (steps/turn)	1 to 1024 - 2048 - 4096
Reference signal	Zero pulse, width 90° 180°, 360° optional
Optoelectronic life time	100.000 (min)
Output frequency	>200 kHz
Output signals	90° shifted A and B, Z + inverted
Output circuit	Linedriver/RS422 Push-pull short-circuit proof NPN Open Collector
Interference immunity	DIN EN 61000-6-2
Emitted interference	DIN EN 61000-6-4
Approval	CE

Technical data - mechanical design

Dimensions (flange)	ø40 mm
Shaft loading	≤60 N axial ≤80 N radial
Protection DIN EN 60529	IP54, IP65
Operating speed	≤10000 rpm
Starting torque	≤0.020 Nm (IP 67)
Materials	Housing: Aluminium Flange: Aluminium Shaft : Stainless steel
Shaft diameter:	4, 5, 6, 8 mm (other diameters on request)
Bearings lifetime:	$2x10^9$ rev. at 100% of full rated shaft load (minimum)
Operating temperature	-20...+85 °C
Storage temperature	-30 °C up to +90 °C
Weight approx.	80 g

Pulse Diagram

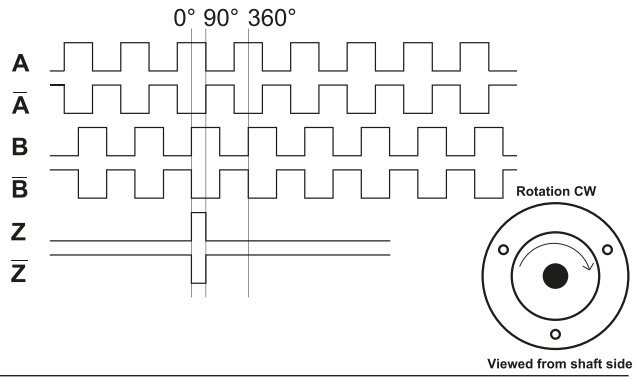

Accessories

Connectors and cables
CRM1204 M12 4 poles female connector or see page 206

Mounting coupling
SK240606 plastic or see page 204

Mounting accessories
YY RST Spring or see page 202-203

FNC 40B & 40V Series

Mechanical Dimensions

40B

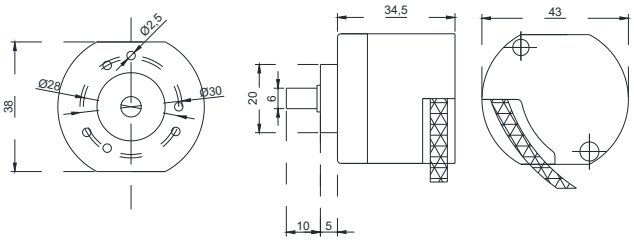

40V

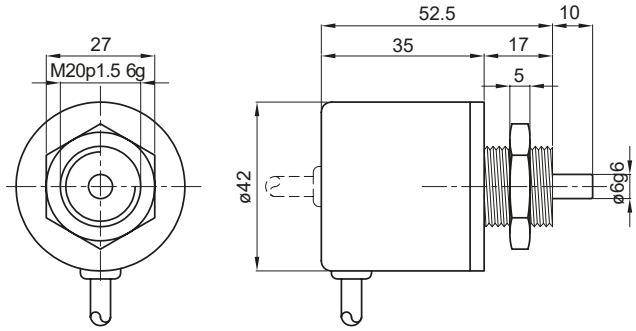

Cable Wiring

Function	Color	Renk	Explanation
+VB	Brown	Kahve	Supply Voltage
GND	White	Beyaz	Ground
A	Green	Yeşil	A Channel
A'	Red	Kırmızı	A Inverted Channel
B	Yellow	Sarı	B Channel
B'	Pink	Pembe	B Inverted Channel
Z	Gray	Gri	Z Channel
Z'	Blue	Mavi	Z Inverted Channel
Shield	Black	Siyah	Shield

Connector Wiring

Connector Type	+Vcc	GND	A	A'	B	B'	Z	Z'	Shield
CRM1204	1	2	3		4				o.r.
CRM1205	1	2	3		4		5		o.r.
CRM1208	1	2	3	6	4	7	5	8	o.r.
CRM1212	1	2	3	6	4	7	5	8	o.r.
CRM1607	1	2	3		4		5		o.r.
CRM1614	Customer Specific								o.r.

For further information please see page 206

Encoder Part Number

FNC	40	B	6	6	30V	1024	–	R2

Housing:
40 : 40mm

Flange Type:
B : Clamping flange

Shaft diameter : 4, 5, 6, 8
Other dimensions on request

Output Channels
1 : A
2 : AB
3 : ABZ
4 : AB+A' B'
6 : ABZ+A' B' Z'

Electrical Connections:

Cable
R2 : radial 2m, shield not connected (standart)
A2 : axial 2m, shield not connected (standart)

Connector:
R1204 R1212
R1205 R1607
R1208 R1614

PPR Options :
1 to 1024 - 2048 - 4096

Supply Voltage and output circuit :
5V : 5V in / out
245V : 5-30V in 5V out
30V : 5-30V in / out

FNC 50B Series

Features

- **Industry 50 mm Standard Size, Clamping Flange**
- **Robust Mechanical and Electrical Construction**
- **Protection up to IP67**
- **Up to 65.536 PPR max.**
- **<300 kHz frequency**
- **Optical and magnetic sensing**

PPR Options :

1 to 1024 - 25 - 50 - 100 - 200 - 250 - 300 - 360 - 400 - 500 - 512 - 600 - 720 - 800 - 900 - 1000 - 1024 - 1250 - 1440 - 2000 - 2048 - 2500 - 3000 - 3600 - 4000 - 5000 -8192 - 10.000, up to 65.536 available

Technical data - electrical ratings

Voltage supply	4.75VDC to 30VDC 4.75VDC to 5.5VDC
Protection:	Output short circuit protection. Reverse polarity protection (except 5V version)
Consumption w/o load	≤60 mA (24 VDC)
Resolution (steps/turn)	1...65.536
Reference signal	Zero pulse, width 90° 180°, 360° optional
Optoelectronic life time	100.000 (min)
Output frequency	>200 kHz
Output signals	90° shifted A and B, Z + inverted
Output circuit	Linedriver/RS422 Push-pull short-circuit proof NPN Open Collector
Interference immunity	DIN EN 61000-6-2
Emitted interference	DIN EN 61000-6-4
Approval	CE

Technical data - mechanical design

Dimensions (flange)	ø50 mm
Shaft loading	≤60 N axial ≤80 N radial
Protection DIN EN 60529	IP54, IP65
Operating speed	≤10000 rpm
Starting torque	≤0.025 Nm (IP 67)
Materials	Housing: Aluminium Flange: Aluminium Shaft : Stainless steel
Shaft diameter:	6, 8, 10 mm (other diameters on request)
Bearings lifetime:	$2x10^9$ rev. at 100% of full rated shaft load (minimum)
Operating temperature	-20...+85 °C
Storage temperature	-30 °C up to +90 °C
Weight approx.	150 g

Accessories

Connectors and cables
CRM1208 M12 8 poles female connector or see page 206

Mounting coupling
MK250808 plastic or see page 204

Mounting accessories
SF50 B square flange or see page 202-203

FNC 50B Series

Mechanical Dimensions

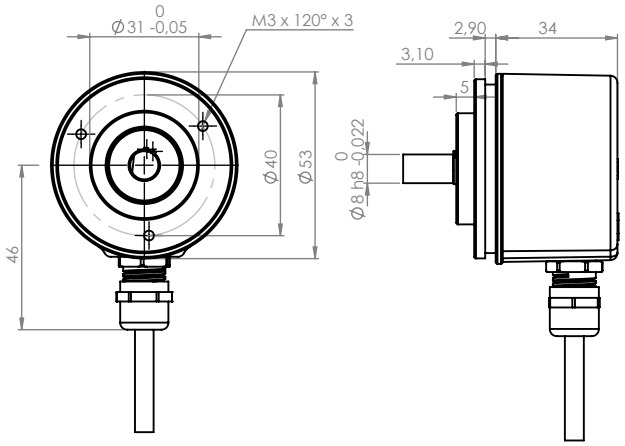

Pulse Diagram

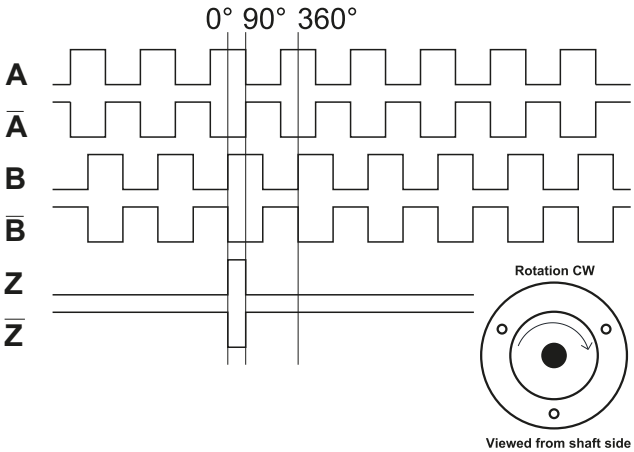

Connector Wiring

Connector Type	+Vcc	GND	A	A'	B	B'	Z	Z'	Shield
CRM1204	1	2	3		4				o.r.
CRM1205	1	2	3		4		5		o.r.
CRM1208	1	2	3	6	4	7	5	8	o.r.
CRM1212	1	2	3	6	4	7	5	8	o.r.
CRM1607	1	2	3		4		5		o.r.
CRM1614	Customer Specific								o.r.
CRM2312R	2-12	10-11	5	6	8	1	3	4	o.r.
CRM2312L	2-12	10-11	5	6	8	1	3	4	o.r.

For further information please see page 206

Cable Wiring

Function	Color	Renk	Explanation
+VB	Brown	Kahve	Supply Voltage
GND	White	Beyaz	Ground
A	Green	Yeşil	A Channel
A'	Red	Kırmızı	A Inverted Channel
B	Yellow	Sarı	B Channel
B'	Pink	Pembe	B Inverted Channel
Z	Gray	Gri	Z Channel
Z'	Blue	Mavi	Z Inverted Channel
Shield	Black	Siyah	Shield

Encoder Part Number

FNC | 50 | B | 10 | 6 | 30V | 1024 | – | R2

Housing:
50 : 50mm

Flange Type:
S : Servo flange
B : Clamping flange

Shaft diameter : 4, 6, 8, 10
Other dimensions on request

Output Channels
1 : A
2 : AB
3 : ABZ
4 : AB+A' B'
6 : ABZ+A' B' Z'

Electrical Connections:

Cable
R2 : radial 2m, shield not connected (standart)
A2 : axial 2m, shield not connected (standart)

Connector:

R1204	R1607
R1205	R1614
R1208	R2312R
RM212	R2312L

PPR Options :

1 to 128 - 25 - 50 - 100 - 200 - 250 - 300 - 360 - 400 - 500 - 512 - 600 - 720 - 800 - 900 - 1000 - 1024 - 1250 - 2000 - 2048 - 2500 - 3000 - 3600 - 4000 - 5000 - 8192 - 10.000 - 65.536

Supply Voltage and output circuit :

5V : 5V in / out
245V : 5-30V in 5V out
30V : 5-30V in / out

Incremental encoders

Resolution 1...65.536 pulses

FNC 540B Series

Features

- **Industry 50 mm size, 22mm diameter clamping flange**
- **Compatible with universal 40 mm encoders**
- **Robust Mechanical and Electrical Construction**
- **Protection up to IP67**
- **Up to 65.536 PPR max.**
- **<300 kHz frequency**

PPR Options :

1 to 1024 - 25 - 50 - 100 - 200 - 250 - 300 - 360 - 400 - 500 - 512 - 600 - 720 - 800 - 900 - 1000 - 1024 - 1250 - 1440 - 2000 - 2048 - 2500 - 3000 - 3600 - 4000 - 5000 - 65.536

Technical data - electrical ratings

Voltage supply	4.75VDC to 30VDC 4.75VDC to 5.5VDC
Protection:	Output short circuit protection. Reverse polarity protection (except 5V version)
Consumption w/o load	≤60 mA (24 VDC)
Resolution (steps/turn)	1...65.536
Reference signal	Zero pulse, width 90° 180°, 360° optional
Optoelectronic life time	100.000 (min)
Output frequency	>200 kHz
Output signals	90° shifted A and B, Z + inverted
Output circuit	Linedriver/RS422 Push-pull short-circuit proof NPN Open Collector
Interference immunity	DIN EN 61000-6-2
Emitted interference	DIN EN 61000-6-4
Approval	CE

Technical data - mechanical design

Dimensions (flange)	ø50 mm
Shaft loading	≤60 N axial ≤80 N radial
Protection DIN EN 60529	IP54, IP65
Operating speed	≤10000 rpm
Starting torque	≤0.025 Nm (IP 67)
Materials	Housing: Aluminium Flange: Aluminium Shaft : Stainless steel
Shaft diameter:	6, 8, 10 mm (other diameters on request)
Bearings lifetime:	$2x10^9$ rev. at 100% of full rated shaft load (minimum)
Operating temperature	-20...+85 °C
Storage temperature	-30 °C up to +90 °C
Weight approx.	200 g

Pulse Diagram

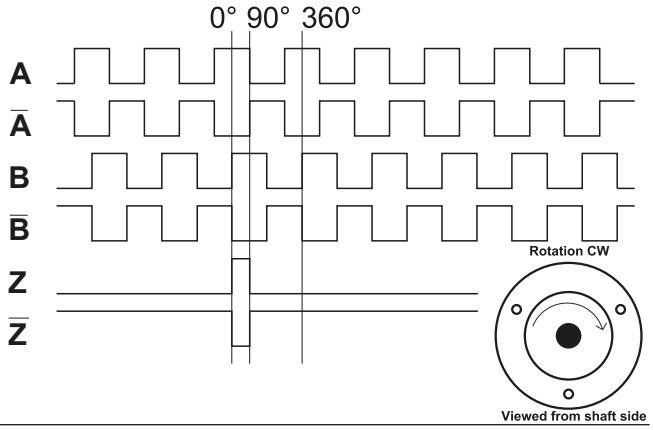

Accessories

Connectors and cables
CRM1204 M12 4 poles female connector or see page 206

Mounting coupling
SK240606 plastic or see page 204

Mounting accessories
YY RST Spring or see page 202-203

FNC 540B Series

Mechanical Dimensions

450B

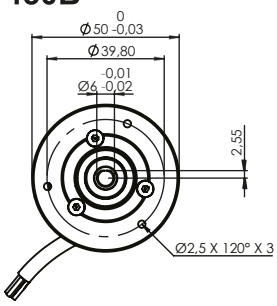

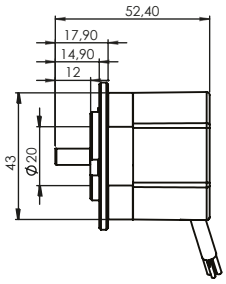

540B

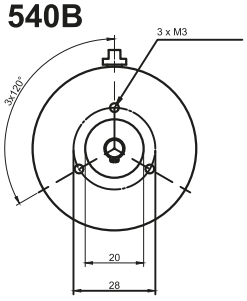

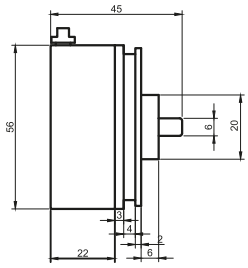

50S

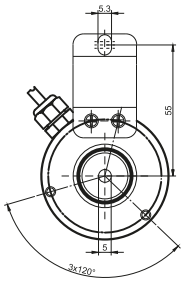

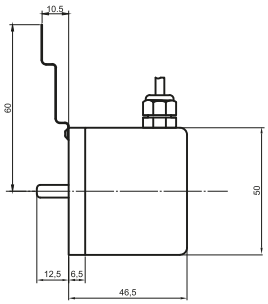

Cable Wiring

Function	Color	Renk	Explanation
+VB	Brown	Kahve	Supply Voltage
GND	White	Beyaz	Ground
A	Green	Yeşil	A Channel
A'	Red	Kırmızı	A Inverted Channel
B	Yellow	Sarı	B Channel
B'	Pink	Pembe	B Inverted Channel
Z	Gray	Gri	Z Channel
Z'	Blue	Mavi	Z Inverted Channel
Shield	Black	Siyah	Shield

Connector Wiring

Connector Type	+Vcc	GND	A	A'	B	B'	Z	Z'	Shield
CRM1204	1	2	3		4				o.r.
CRM1205	1	2	3		4		5		o.r.
CRM1208	1	2	3	6	4	7	5	8	o.r.
CRM1212	1	2	3	6	4	7	5	8	o.r.
CRM1607	1	2	3		4		5		o.r.
CRM1614	Customer Specific								o.r.
CRM2312R	2-12	10-11	5	6	8	1	3	4	o.r.
CRM2312L	2-12	10-11	5	6	8	1	3	4	o.r.

For further information please see page 206

Encoder Part Number

FNC	540	B	6	6	30V	1024	–	R2

Housing:
50 : 50mm
450 : 40mm housing, 20mm clamp
540 : 50mm housing, 2,mm clamp

Flange Type:
S : Servo flange
B : Clamping flange

Shaft diameter : 4, 6, 8, 10
Other dimensions on request

Output Channels
1 : A
2 : AB
3 : ABZ
4 : AB+A' B'
6 : ABZ+A' B' Z'

Electrical Connections:

Cable
R2 : radial 2m, shield not connected (standart)
A2 : axial 2m, shield not connected (standart)

Connector:

R1204	R1607
R1205	R1614
R1208	R2312R
R1212	R2312L

PPR Options :

1 to 128 - 25 - 50 - 100 - 200 - 250 - 300 - 360 - 400 - 500 - 512 - 600 - 720 - 800 - 900 - 1000 - 1024 - 1250 - 2000 - 2048 - 2500 - 3000 - 3600 - 4000 - 5000

Supply Voltage and output circuit :
5V : 5V in / out
245V : 5-30V in 5V out
30V : 5-30V in / out

FNC 58S Series

Features

- **Industry 58 mm standart size, servo flange**
- **Robust mechanical and electrical construction**
- **Protection up to IP67**
- **Up to 65.536 PPR max.**
- **<300 kHz frequency**
- **Optical and magnetic sensing**

PPR Options :

1 to 65.536 - 25 - 50 - 100 - 200 - 250 - 300 - 360 - 400 - 500 512 - 600 - 720 - 800 - 900 - 1000 - 1024 - 1250 - 1440 - 2000 - 2048 - 2500 - 3000 - 3600 - 4000 - 4096 - 5000 - 6000 - 8192 - 10000 - 12500 - 16384 - 20000 - 25000

Technical data - electrical ratings

Voltage supply	4.75VDC to 30VDC 4.75VDC to 5.5VDC
Protection:	Output short circuit protection. Reverse polarity protection (except 5V version)
Consumption w/o load	≤60 mA (24 VDC)
Resolution (steps/turn)	1...25.000
Reference signal	Zero pulse, width 90° 180°, 360° optional
Optoelectronic life time	100.000 (min)
Output frequency	>200 kHz
Output signals	90° shifted A and B, Z + inverted
Output circuit	Linedriver/RS422 Push-pull short-circuit proof NPN Open Collector
Interference immunity	DIN EN 61000-6-2
Emitted interference	DIN EN 61000-6-4
Approval	CE

Technical data - mechanical design

Dimensions (flange)	ø58 mm
Shaft loading	≤80 N axial ≤100 N radial
Protection DIN EN 60529	IP54, IP65
Operating speed	≤10000 rpm
Starting torque	≤0.025 Nm (IP 67)
Materials	Housing: Aluminium Flange: Aluminium Shaft : Stainless steel
Shaft diameter:	4, 6, 8, 10 mm (other diameters on request)
Bearings lifetime:	$2x10^9$ rev. at 100% of full rated shaft load (minimum)
Operating temperature	-20...+85 °C
Storage temperature	-30 °C up to +90 °C
Weight approx.	200 g

Accessories

Connectors and cables
CRM2312R M23 12 poles female connector or see page 206

Mounting coupling
PF260808 plastic or see page 204

Mounting accessories
YY ASTK spring or see page 202-203

FNC 58S Series

Mechanical Dimensions

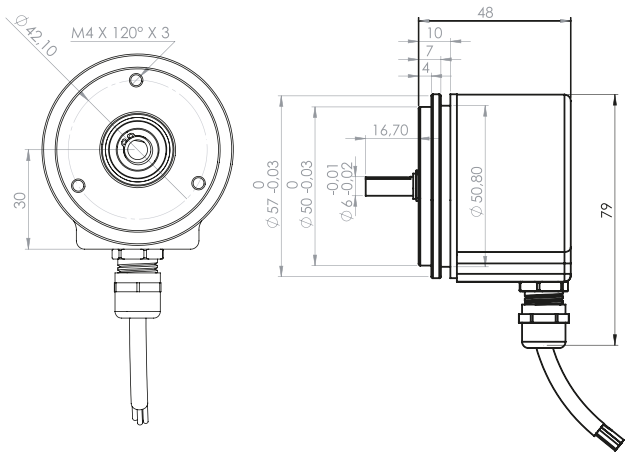

Pulse Diagram

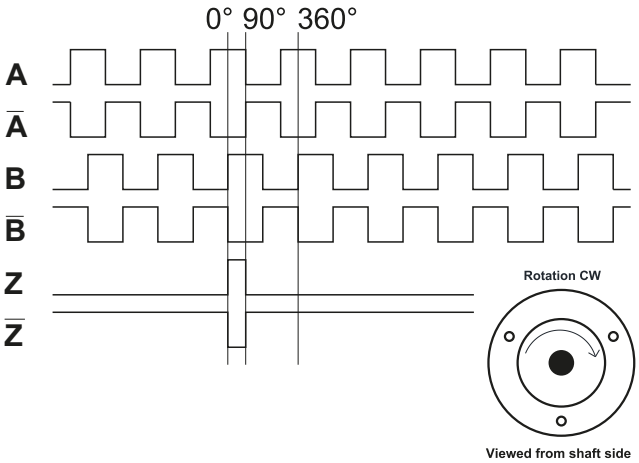

Connector Wiring

Connector Type	+Vcc	GND	A	A'	B	B'	Z	Z'	Shield
CRM1204	1	2	3		4				o.r.
CRM1205	1	2	3		4		5		o.r.
CRM1208	1	2	3	6	4	7	5	8	o.r.
CRM1212	1	2	3	6	4	7	5	8	o.r.
CRM1607	1	2	3		4		5		o.r.
CRM1614	Customer Specific								o.r.
CRM2312R	2-12	10-11	5	6	8	1	3	4	o.r.
CRM2312L	2-12	10-11	5	6	8	1	3	4	o.r.

For further information please see page 206

Cable Wiring

Function	Color	Renk	Explanation
+VB	Brown	Kahve	Supply Voltage
GND	White	Beyaz	Ground
A	Green	Yeşil	A Channel
A'	Red	Kırmızı	A Inverted Channel
B	Yellow	Sarı	B Channel
B'	Pink	Pembe	B Inverted Channel
Z	Gray	Gri	Z Channel
Z'	Blue	Mavi	Z Inverted Channel
Shield	Black	Siyah	Shield

Encoder Part Number

FNC | 58 | S | 8 | 6 | 30V | 1024 | – | R2

Housing:
58 : 58mm

Flange Type:
S : Servo flange
B : Clamping flange

Shaft diameter : 4, 6, 8, 10
Other dimensions on request

Output Channels
1 : A
2 : AB
3 : ABZ
4 : AB+A' B'
6 : ABZ+A' B' Z'

Electrical Connections:

Cable
R2 : radial 2m, shield not connected (standart)
A2 : axial 2m, shield not connected (standart)

Connector:

R1204	R1607
R1205	R1614
R1208	R2312R
R1212	R2312L

PPR Options :

1 to 128 - 25 - 50 - 100 - 200 - 250 - 300 - 360 - 400 - 500 - 512 - 600 - 720 - 800 - 900 - 1000 - 1024 - 1250 - 1440 - 2000 - 2048 - 2500 - 3000 - 3600 - 4000 - 4096 - 5000 - 6000 - 8192 - 10000 - 12500 - 16384 - 20000 - 25000

Supply Voltage and output circuit :
5V : 5V in / out
245V : 5-30V in 5V out
30V : 5-30V in / out

Incremental encoders
Two Independent / Redundant Outputs

Resolution 1...25.000 pulses

FNC 58S Double Out Series

Two Independent Output Options

Features

- **Industry 58 mm standard size, servo flange**
- **Robust mechanical and electrical construction**
- **Protection up to IP67**
- **Up to 25.000 PPR max.**
- **<300 kHz frequency**
- **Redundant Independent Outputs**

PPR Options :

1 to 128 - 25 - 50 - 100 - 200 - 250 - 300 - 360 - 400 - 500 - 512 - 600 - 720 - 800 - 900 - 1000 - 1024 - 1250 - 1440 - 2000 - 2048 - 2500 - 3000 - 3600 - 4000 - 4096 - 5000 - 6000 - 8192 - 10000 - 12500 - 16384 - 20000 - 25000

Technical data - electrical ratings

Voltage supply	4.75VDC to 30VDC 4.75VDC to 5.5VDC
Protection:	Output short circuit protection. Reverse polarity protection (except 5V version)
Consumption w/o load	≤60 mA (24 VDC)
Resolution (steps/turn)	1... up to 65536
Reference signal	Zero pulse, width 90° 180°, 360° optional
Optoelectronic life time	100.000 (min)
Output frequency	>200 kHz
Output signals	90° shifted A and B, Z + inverted
Output circuit	Linedriver/RS422 Push-pull short-circuit proof NPN Open Collector
Interference immunity	DIN EN 61000-6-2
Emitted interference	DIN EN 61000-6-4
Approval	CE

Technical data - mechanical design

Dimensions (flange)	ø58 mm
Shaft loading	≤80 N axial ≤100 N radial
Protection DIN EN 60529	IP54, IP65
Operating speed	≤10000 rpm
Starting torque	≤0.025 Nm (IP 67)
Materials	Housing: Aluminium Flange: Aluminium Shaft : Stainless steel
Shaft diameter:	4, 6, 8, 10 mm (other diameters on request)
Bearings lifetime:	$2x10^9$ rev. at 100% of full rated shaft load (minimum)
Operating temperature	-20...+85 °C
Storage temperature	-30 °C up to +90 °C
Weight approx.	200 g

Accessories

Connectors and cables
CRM2312R M23 12 poles female connector or see page 206

Mounting coupling
PF260808 plastic or see page 204

Mounting accessories
YY ASTK spring or see page 202-203

FNC 58S Double Out Series

Mechanical Dimensions

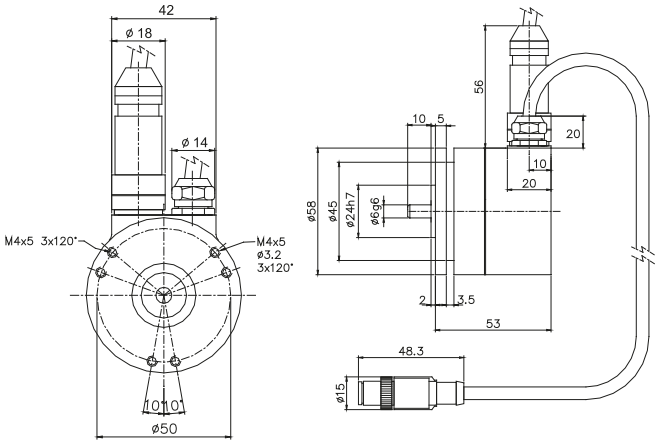

Pulse Diagram

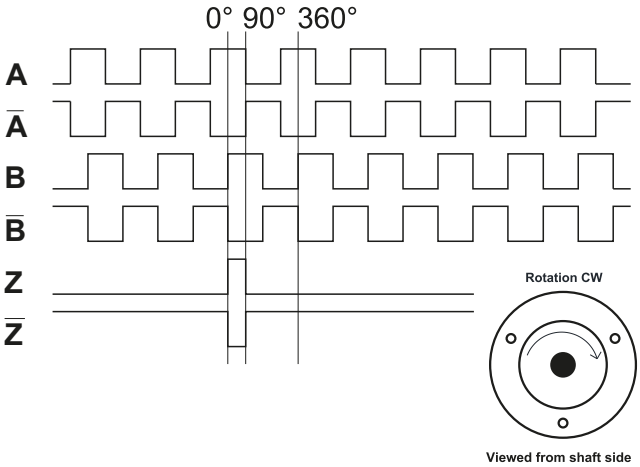

Connector Wiring

MM1205

	PIN
+V	2
0V	1
A	3
B	4
0	5
Gnd	Chassi

FM1204

	PIN
0V	1
-A	4
0V	3
-B	2

For further information please see page 206

Cable Wiring

Function	Color	Renk	Explanation
+VB	Brown	Kahve	Supply Voltage
GND	White	Beyaz	Ground
A	Green	Yeşil	A Channel
A'	Red	Kırmızı	A Inverted Channel
B	Yellow	Sarı	B Channel
B'	Pink	Pembe	B Inverted Channel
Z	Gray	Gri	Z Channel
Z'	Blue	Mavi	Z Inverted Channel
Shield	Black	Siyah	Shield

Encoder Part Number

FNC | **58** | **S** | **6** | **6** | **30V** | **PPR1** + **PPR2**

Housing:
58 : 58mm

Flange Type:
S : Servo flange

Shaft diameter : 4, 6, 8, 10
Other dimensions on request

Output Channels
6 : ABZ+A' B' Z'

Electrical Connections:
Customer Specific / Two Independent Options Available

PPR Options :
1 to 128 - 25 - 50 - 100 - 200 - 250 - 300 - 360 - 400 - 500 - 512 - 600 - 720 - 800 - 900 - 1000 - 1024 - 1250 - 1440 - 2000 - 2048 - 2500 - 3000 - 3600 - 4000 - 4096 - 5000 - 6000 - 8192 - 10000 - 12500 - 16384 - 20000 - 25000

Supply Voltage and output circuit :
5V : 5V in / out
245V : 5-30V in 5V out
30V : 5-30V in / out

FNC 58SC Series

Features

- **Industry 58 mm standard size, clamping flange**
- **Robust mechanical and electrical construction**
- **Protection up to IP67**
- **Up to 25.000 PPR max.**
- **<300 kHz frequency**

PPR Options :

1 to 128 - 25 - 50 - 100 - 200 - 250 - 300 - 360 - 400 - 500 - 512 - 600 - 720 - 800 - 900 - 1000 - 1024 - 1250 - 1440 - 2000 - 2048 - 2500 - 3000 - 3600 - 4000 - 4096 - 5000 - 6000 - 8192 - 10000 - 12500 - 16384 - 20000 - 25000

Technical data - electrical ratings

Voltage supply	4.75VDC to 30VDC 4.75VDC to 5.5VDC
Protection:	Output short circuit protection. Reverse polarity protection (except 5V version)
Consumption w/o load	≤60 mA (24 VDC)
Resolution (steps/turn)	1...25.000 up to 65536
Reference signal	Zero pulse, width 90° 180°, 360° optional
Optoelectronic life time	100.000 (min)
Output frequency	>200 kHz
Output signals	90° shifted A and B, Z + inverted
Output circuit	Linedriver/RS422 Push-pull short-circuit proof NPN Open Collector
Interference immunity	DIN EN 61000-6-2
Emitted interference	DIN EN 61000-6-4
Approval	CE

Technical data - mechanical design

Dimensions (flange)	ø58 mm
Shaft loading	≤120 N axial ≤160 N radial
Protection DIN EN 60529	IP54, IP65
Operating speed	≤10000 rpm
Starting torque	≤0.025 Nm (IP 67)
Materials	Housing: Aluminium Flange: Aluminium Shaft : Stainless steel
Shaft diameter:	6, 8, 10, 12 mm (other diameters on request)
Bearings lifetime:	$2x10^9$ rev. at 100% of full rated shaft load (minimum)
Operating temperature	-20...+85 °C
Storage temperature	-30 °C up to +90 °C
Weight approx.	250 g

Accessories

Connectors and cables
See page 206

Mounting coupling
See page 204

Mounting accessories
See page 202-203

Connector Wiring

Connector Type	+Vcc	GND	A	A'	B	B'	Z	Z'	Shield
CRM1204	1	2	3		4				o.r.
CRM1205	1	2	3		4		5		o.r.
CRM1208	1	2	3	6	4	7	5	8	o.r.
CRM1212	1	2	3	6	4	7	5	8	o.r.
CRM1607	1	2	3		4		5		o.r.
CRM1614	Customer Specific								o.r.
CRM2312R	2-12	10-11	5	6	8	1	3	4	o.r.
CRM2312L	2-12	10-11	5	6	8	1	3	4	o.r.

FNC 58SC Series

Mechanical Dimensions

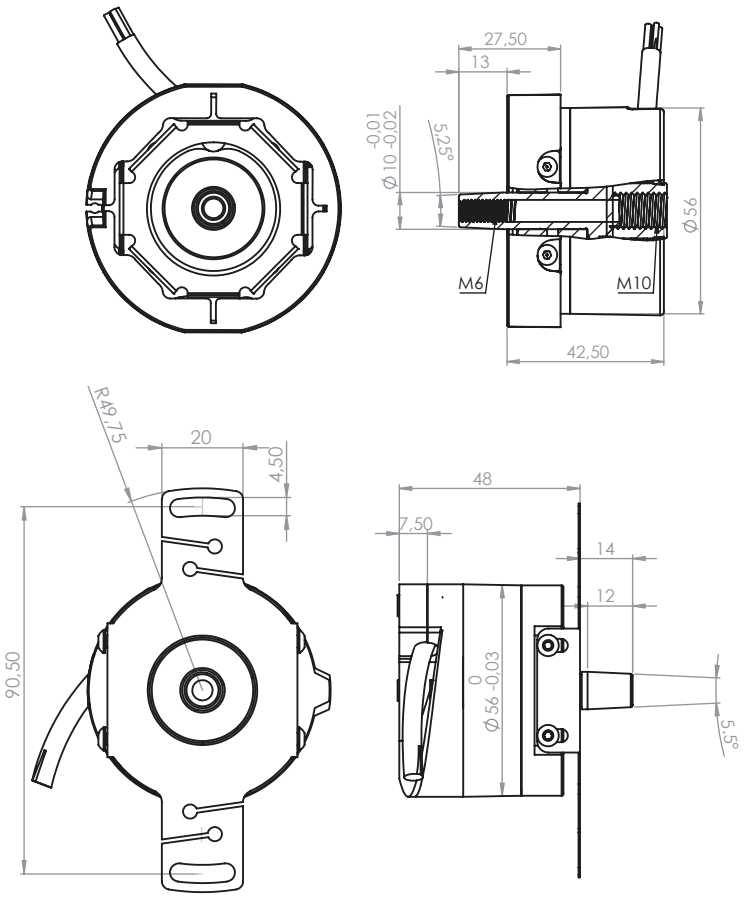

Pulse Diagram

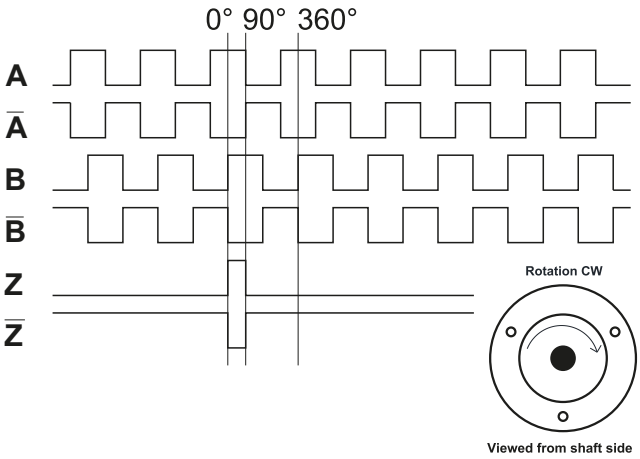

Cable Wiring

Function	Color	Renk	Explanation
+VB	Brown	Kahve	Supply Voltage
GND	White	Beyaz	Ground
A	Green	Yeşil	A Channel
A'	Red	Kırmızı	A Inverted Channel
B	Yellow	Sarı	B Channel
B'	Pink	Pembe	B Inverted Channel
Z	Gray	Gri	Z Channel
Z'	Blue	Mavi	Z Inverted Channel
Shield	Black	Siyah	Shield

Encoder Part Number

FNC	58	SC	10	6	30V	1024	–	R2

Housing:
58 : 58mm

Flange Type:
SC : 58 mm with conic shaft

Shaft diameter : 6, 8, 10, 12
Other dimensions on request

Output Channels
1 : A
2 : AB
3 : ABZ
4 : AB+A' B'
6 : ABZ+A' B' Z'

Electrical Connections:
Cable
R2 : radial 2m, shield not connected (standart)
A2 : axial 2m, shield not connected (standart)
K12 : 12 pin socket connection

Connector:

R1204	R1607
R1205	R1614
R1208	R2312R
R1212	R2312L

PPR Options :
1 to 128 - 25 - 50 - 100 - 200 - 250 - 300 - 360 - 400 - 500 - 512 - 600 - 720 - 800 - 900 - 1000 - 1024 - 1250 - 1440 - 2000 - 2048 - 2500 - 3000 - 3600 - 4000 - 4096 - 5000 - 6000 - 8192 - 10000 - 12500 - 16384 - 20000 - 25000

Supply Voltage and output circuit :
5V : 5V in / out
245V : 5-30V in 5V out
30V : 5-30V in / out

FNC 58B / 58D Series

Features

- **Industry 58 mm standart size, clamping flange**
- **Robust mechanical and electrical construction**
- **Protection up to IP67**
- **Up to 65.536 PPR max.**
- **<300 kHz frequency**

PPR Options :

1 to 65.536 - 25 - 50 - 100 - 200 - 250 - 300 - 360 - 400 - 500 - 512 - 600 - 720 - 800 - 900 - 1000 - 1024 - 1250 - 1440 - 2000 - 2048 - 2500 - 3000 - 3600 - 4000 - 4096 - 5000 - 6000 - 8192 - 10000 - 12500 - 16384 - 20000 - 25000

Technical data - electrical ratings

Voltage supply	4.75VDC to 30VDC 4.75VDC to 5.5VDC
Protection:	Output short circuit protection. Reverse polarity protection (except 5V version)
Consumption w/o load	≤60 mA (24 VDC)
Resolution (steps/turn)	1...25.000 up to 65536
Reference signal	Zero pulse, width 90° 180°, 360° optional
Optoelectronic life time	100.000 (min)
Output frequency	>200 kHz
Output signals	90° shifted A and B, Z + inverted
Output circuit	Linedriver/RS422 Push-pull short-circuit proof NPN Open Collector
Interference immunity	DIN EN 61000-6-2
Emitted interference	DIN EN 61000-6-4
Approval	CE

Technical data - mechanical design

Dimensions (flange)	ø58 mm
Shaft loading	≤120 N axial ≤160 N radial
Protection DIN EN 60529	IP54, IP65
Operating speed	≤10000 rpm
Starting torque	≤0.025 Nm (IP 67)
Materials	Housing: Aluminium Flange: Aluminium Shaft : Stainless steel
Shaft diameter:	4, 6, 8, 10, 12, 14, 15 mm (other diameters on request)
Bearings lifetime:	$2x10^9$ rev. at 100% of full rated shaft load (minimum)
Operating temperature	-20...+85 °C
Storage temperature	-30 °C up to +90 °C
Weight approx.	250 g

Accessories

Connectors and cables
CRM2312 M23 12 poles female connector or see page 206

Mounting coupling
PF481010 plastic or see page 204

Mounting accessories
SF58B square flange spring or see page 202-203

FNC 58B / 58D Series

Mechanical Dimensions

58B

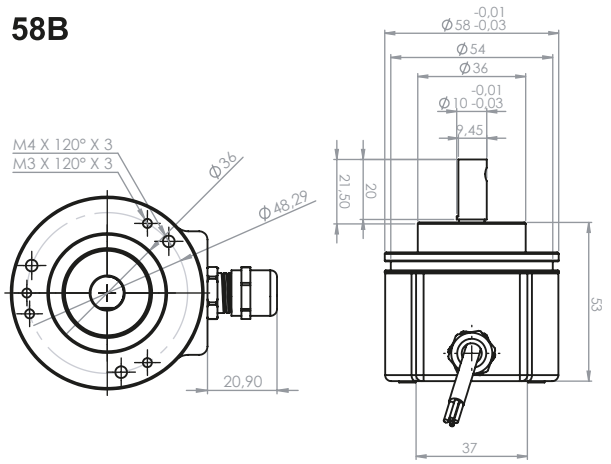

Pulse Diagram

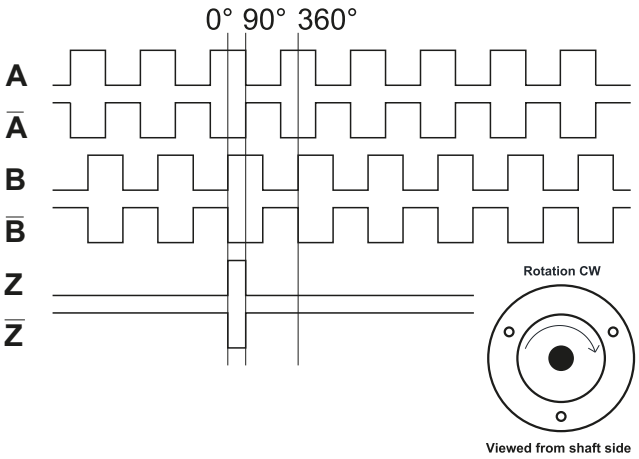

Connector Wiring

Connector Type	+Vcc	GND	A	A'	B	B'	Z	Z'	Shield
CRM1204	1	2	3		4				o.r.
CRM1205	1	2	3		4		5		o.r.
CRM1208	1	2	3	6	4	7	5	8	o.r.
CRM1212	1	2	3	6	4	7	5	8	o.r.
CRM1607	1	2	3		4		5		o.r.
CRM1614	Customer Specific								o.r.
CRM2312R	2-12	10-11	5	6	8	1	3	4	o.r.
CRM2312L	2-12	10-11	5	6	8	1	3	4	o.r.

For further information please see page 206

Cable Wiring

Function	Color	Renk	Explanation
+VB	Brown	Kahve	Supply Voltage
GND	White	Beyaz	Ground
A	Green	Yeşil	A Channel
A'	Red	Kırmızı	A Inverted Channel
B	Yellow	Sarı	B Channel
B'	Pink	Pembe	B Inverted Channel
Z	Gray	Gri	Z Channel
Z'	Blue	Mavi	Z Inverted Channel
Shield	Black	Siyah	Shield

Encoder Part Number

FNC 58 B 8 6 30V 1024 – R2

Housing:
58 : 58mm

Flange Type:
B : Clamp Diameter 36 mm
D : Clamp Diameter 32 mm

Shaft diameter : 4, 6, 8, 10, 12, 14, 15
Other dimensions on request

Output Channels
1 : A
2 : AB
3 : ABZ
4 : AB+A' B'
6 : ABZ+A' B' Z'

Electrical Connections:

Cable
R2 : radial 2m, shield not connected (standart)
A2 : axial 2m, shield not connected (standart)

Connector:

R1204	R1607
R1205	R1614
R1208	R2312R
R1212	R2312L

PPR Options :
1 to 128 - 25 - 50 - 100 - 200 - 250 - 300 - 360 - 400 - 500 - 512 - 600 - 720 - 800 - 900 - 1000 - 1024 - 1250 - 1440 - 2000 - 2048 - 2500 - 3000 - 3600 - 4000 - 4096 - 5000 - 6000 - 8192 - 10000 - 12500 - 16384 - 20000 - 25000 - 65.536

Supply Voltage and output circuit :
5V : 5V in / out
245V : 5-30V in 5V out
30V : 5-30V in / out

FNC 52D Series

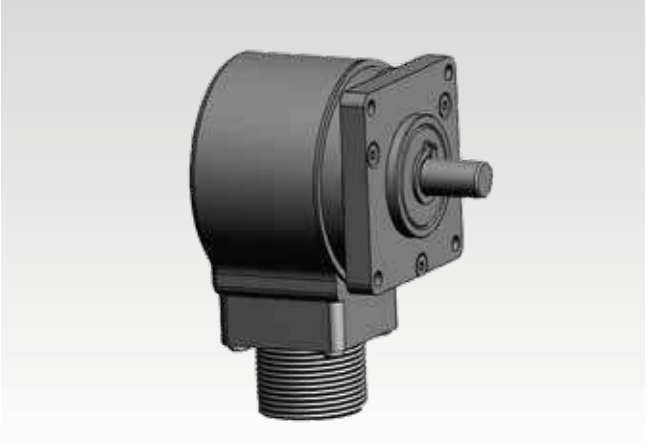

Features

- **Industry 52 mm special size, square flange**
- **Robust mechanical and electrical construction**
- **Protection up to IP67**
- **Up to 5.000 PPR max.**
- **<300 kHz frequency**

PPR Options

1 to 128 - 25 - 50 - 100 - 200 - 250 - 300 - 360 - 400 - 500 - 512 - 600 - 720 - 800 - 900 - 1000 - 1024 - 1250 - 2000 - 2048 - 2500 - 3000 - 3600 - 4000 - 4096 - 5000

Technical data - electrical ratings

Voltage supply	4.75VDC to 30VDC 4.75VDC to 5.5VDC
Protection:	Output short circuit protection. Reverse polarity protection (except 5V version)
Consumption w/o load	≤60 mA (24 VDC)
Resolution (steps/turn)	1...5.000 up to 65536
Reference signal	Zero pulse, width 90° 180°, 360° optional
Optoelectronic life time	100.000 (min)
Output frequency	>200 kHz
Output signals	90° shifted A and B, Z + inverted
Output circuit	Linedriver/RS422 Push-pull short-circuit proof NPN Open Collector
Interference immunity	DIN EN 61000-6-2
Emitted Interference	DIN EN 61000-6-4
Approval	CE

Technical data - mechanical design

Dimensions (flange)	ø52 mm
Shaft loading	≤120 N axial ≤160 N radial
Protection DIN EN 60529	IP54, IP65
Operating speed	≤10000 rpm
Starting torque	≤0.025 Nm (IP 67)
Materials	Housing: Aluminium Flange: Aluminium Shaft : Stainless steel
Shaft diameter:	4, 6, 8, 10, 12, 14, 15 mm (other diameters on request)
Bearings lifetime:	$2x10^9$ rev. at 100% of full rated shaft load (minimum)
Operating temperature	-20...+85 °C
Storage temperature	-30 °C up to +90 °C
Weight approx.	200 g

Incremental encoders

Mechanical Dimensions
Cable/Connector Wiring, Part Number

FNC 52D Series

Mechanical Dimensions

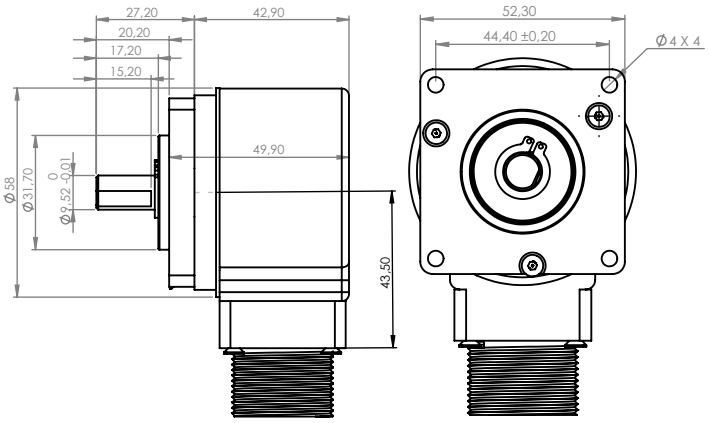

Pulse Diagram

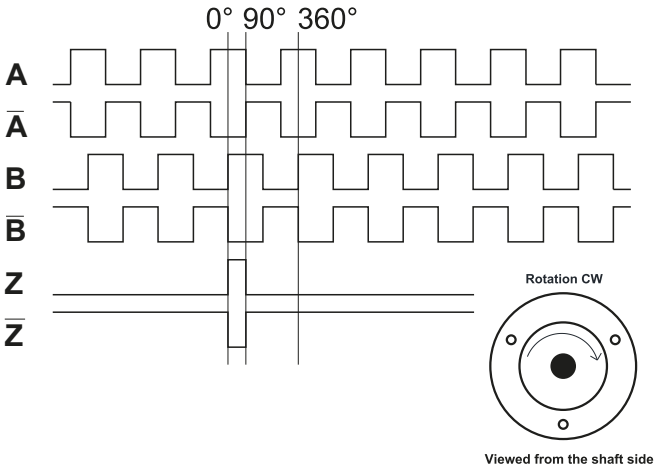

Connector Wiring

Please consult factory

Cable Wiring

Function	Color	Renk	Explanation
+VB	Brown	Kahve	Supply Voltage
GND	White	Beyaz	Ground
A	Green	Yeşil	A Channel
A'	Red	Kırmızı	A Inverted Channel
B	Yellow	Sarı	B Channel
B'	Pink	Pembe	B Inverted Channel
Z	Gray	Gri	Z Channel
Z'	Blue	Mavi	Z Inverted Channel
Shield	Black	Siyah	Shield

Encoder Part Number

FNC | 52 | D | 10 | 6 | 30V | 1024 | – | R2

Housing:
52 : 52mm

Flange Type:
D : Square flange, 32mm clamp

Shaft diameter : 4, 6, 8, 10, 12, 14, 15
Other dimensions on request

Output Channels
1 : A
2 : AB
3 : ABZ
4 : AB+A' B'
6 : ABZ+A' B' Z'

Electrical Connections:

Cable
R2 : radial 2m, shield not connected (standart)
A2 : axial 2m, shield not connected (standart)

Connector:

R1204	R1607	R2810
R1205	R1614	
R1208	R2312R	
R1212	R2312L	

PPR Options :

1 to 128 - 25 - 50 - 100 - 200 - 250 - 300 - 360 - 400 - 500 - 512 - 600 - 720 - 800 - 900 - 1000 - 1024 - 1250 - 2000 - 2048 - 2500 - 3000 - 3600 - 4000 - 4096 - 5000

Supply Voltage and output circuit
5V : 5V in / out
245V : 5-30V in 5V out
30V : 5-30V in / out

FNC 63K - 63D Series, Sqaure Flange

Features

- **Industry 63 mm special size, square flange**
- **Robust mechanical and electrical construction**
- **Protection up to IP67**
- **Up to 65.536 PPR max.**
- **<300 kHz frequency**

PPR Options :

1 to 65.536- 25 - 50 - 100 - 200 - 250 - 300 - 360 - 400 - 500 512 - 600 - 720 - 800 - 900 - 1000 - 1024 - 1250 - 2000 - 2048 - 2500 - 3000 - 3600 - 4000 - 4096 - 5000

Technical data - electrical ratings

Voltage supply	4.75VDC to 30VDC 4.75VDC to 5.5VDC
Protection:	Output short circuit protection. Reverse polarity protection (except 5V version)
Consumption w/o load	≤60 mA (24 VDC)
Resolution (steps/turn)	up to 65536
Reference signal	Zero pulse, width 90° 180°, 360° optional
Optoelectronic life time	100.000 (min)
Output frequency	>200 kHz
Output signals	90° shifted A and B, Z + inverted
Output circuit	Linedriver/RS422 Push-pull short-circuit proof NPN Open Collector
Interference immunity	DIN EN 61000-6-2
Emitted interference	DIN EN 61000-6-4
Approval	CE

Technical data - mechanical design

Dimensions (flange)	ø63 mm
Shaft loading	≤120 N axial ≤160 N radial
Protection DIN EN 60529	IP54, IP65
Operating speed	≤10000 rpm
Starting torque	≤0.025 Nm (IP 67)
Materials	Housing: Aluminium Flange: Aluminium Shaft : Stainless steel
Shaft diameter:	6, 8, 10, 12, 14 mm (other diameters on request)
Bearings lifetime:	$2x10^9$ rev. at 100% of full rated shaft load (minimum)
Operating temperature	-20...+85 °C
Storage temperature	-30 °C up to +90 °C
Weight approx.	200 g

Accessories

Connectors and cables
CRM1208 M12 8 poles female connector or see page 206

Mounting coupling
MK301010 metal or see page 204

Mounting accessories
See page 202-203

FNC 63K - 63D Series, Sqaure Flange

Mechanical Dimensions

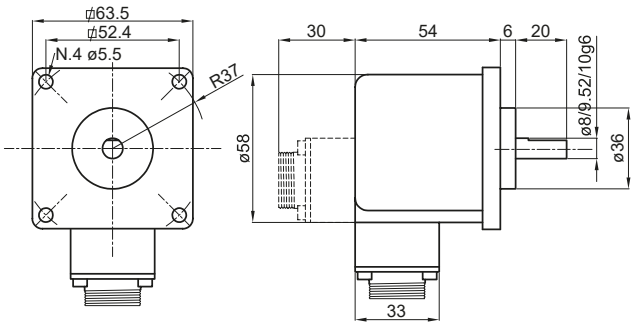

Pulse Diagram

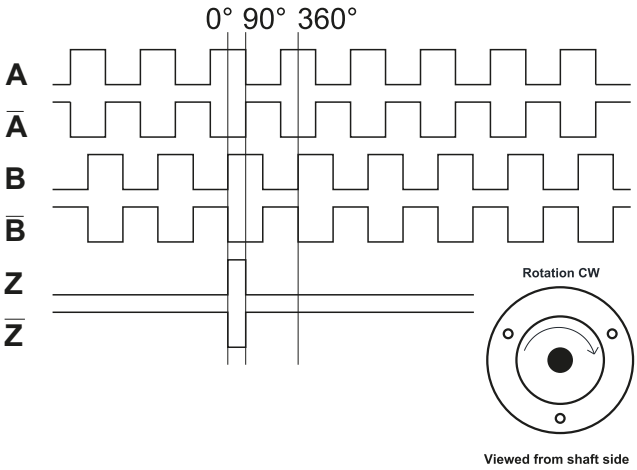

Connector Wiring

Connector Type	+Vcc	GND	A	A'	B	B'	Z	Z'	Shield
CRM1204	1	2	3		4				o.r.
CRM1205	1	2	3		4		5		o.r.
CRM1208	1	2	3	6	4	7	5	8	o.r.
CRM1212	1	2	3	6	4	7	5	8	o.r.
CRM1607	1	2	3		4		5		o.r.
CRM1614	Customer Specific								o.r.
CRM2312R	2-12	10-11	5	6	8	1	3	4	o.r.
CRM2312L	2-12	10-11	5	6	8	1	3	4	o.r.

For further information please see page 206

Cable Wiring

Function	Color	Renk	Explanation
+VB	Brown	Kahve	Supply Voltage
GND	White	Beyaz	Ground
A	Green	Yeşil	A Channel
A'	Red	Kırmızı	A Inverted Channel
B	Yellow	Sarı	B Channel
B'	Pink	Pembe	B Inverted Channel
Z	Gray	Gri	Z Channel
Z'	Blue	Mavi	Z Inverted Channel
Shield	Black	Siyah	Shield

Encoder Part Number

FNC | 63 | K | 10 | 6 | 30V | 1024 | – | R2

Housing:
63 : 63mm

Flange Type:
K : Square flange, 36mm clamp
D : Square flange, 32mm clamp

Shaft diameter : 10, 12, 14
Other dimensions on request

Output Channels
1 : A
2 : AB
3 : ABZ
4 : AB+A' B'
6 : ABZ+A' B' Z'

Electrical Connections:

Cable
R2 : radial 2m, shield not connected (standart)
A2 : axial 2m, shield not connected (standart)

Connector:

R1204	R1607
R1205	R1614
R1208	R2312R
R1212	R2312L

PPR Options :

1 to 128 - 25 - 50 - 100 - 200 - 250 - 300 - 360 - 400 - 500 - 512 - 600 - 720 - 800 - 900 - 1000 - 1024 - 1250 - 2000 - 2048 - 2500 - 3000 - 3600 - 4000 - 4096 - 5000 - 65536

Supply Voltage and output circuit :

5V : 5V in / out
245V : 5-30V in 5V out
30V : 5-30V in / out

Incremental encoders

Resolution 1...65.536 pulses

FNC 64S & 80S Series

Features

- **Industry 64 mm special size, servo flange**
- **Robust mechanical and electrical construction**
- **Protection up to IP67**
- **Up to 5.000 PPR max.**
- **<300 kHz frequency**

PPR Options :

1 to 128 - 25 - 50 - 100 - 200 - 250 - 300 - 360 - 400 - 500 - 512 - 600 - 720 - 800 - 900 - 1000 - 1024 - 1250 - 2000 - 2048 - 2500 - 3000 - 3600 - 4000 - 4096 - 5000

Technical data - electrical ratings

Voltage supply	4.75VDC to 30VDC 4.75VDC to 5.5VDC
Protection:	Output short circuit protection. Reverse polarity protection (except 5V version)
Consumption w/o load	≤60 mA (24 VDC)
Resolution (steps/turn)	1...5.000 up to 65536
Reference signal	Zero pulse, width 90° 180°, 360° optional
Optoelectronic life time	100.000 (min)
Output frequency	>200 kHz
Output signals	90° shifted A and B, Z + inverted
Output circuit	Linedriver/RS422 Push-pull short-circuit proof NPN Open Collector
Interference immunity	DIN EN 61000-6-2
Emitted interference	DIN EN 61000-6-4
Approval	CE

Technical data - mechanical design

Dimensions (flange)	ø64 mm
Shaft loading	≤120 N axial ≤160 N radial
Protection DIN EN 60529	IP54, IP65
Operating speed	≤10000 rpm
Starting torque	≤0.025 Nm (IP 67)
Materials	Housing: Aluminium Flange: Aluminium Shaft : Stainless steel
Shaft diameter:	6, 8, 10, 12 mm (other diameters on request)
Bearings lifetime:	$2x10^9$ rev. at 100% of full rated shaft load (minimum)
Operating temperature	-20...+85 °C
Storage temperature	-30 °C up to +90 °C
Weight approx.	200 g

Accessories

Connectors and cables
CRM1208 M12 8 poles female connector or see page 206

Mounting coupling
SK240808 plastic or see page 204

Mounting accessories
See page 202-203

Mechanical Dimensions

64S

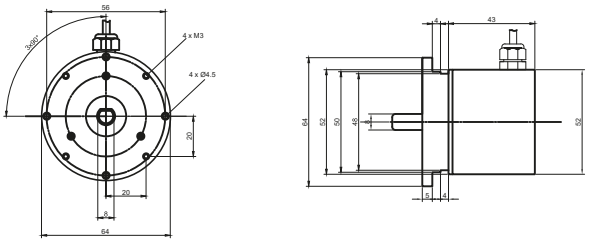

80S

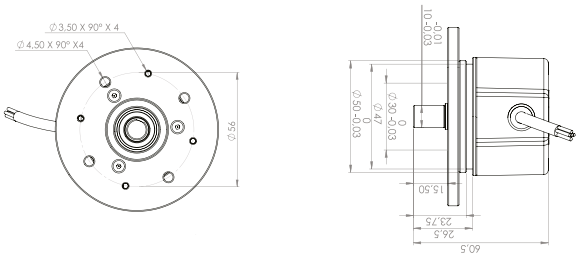

80B

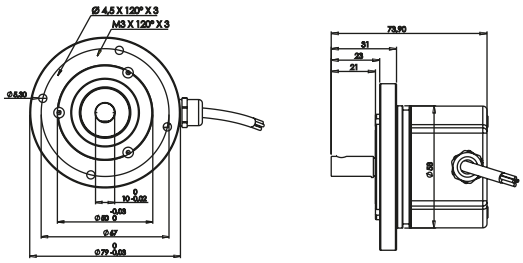

Pulse Diagram

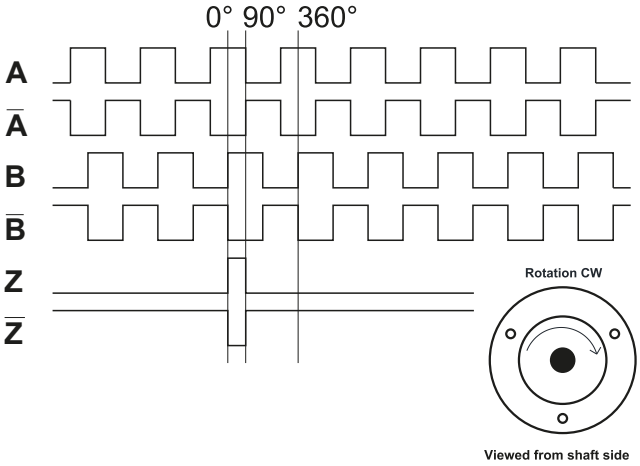

Cable Wiring

Function	Color	Renk	Explanation
+VB	Brown	Kahve	Supply Voltage
GND	White	Beyaz	Ground
A	Green	Yeşil	A Channel
A'	Red	Kırmızı	A Inverted Channel
B	Yellow	Sarı	B Channel
B'	Pink	Pembe	B Inverted Channel
Z	Gray	Gri	Z Channel
Z'	Blue	Mavi	Z Inverted Channel
Shield	Black	Siyah	Shield

Encoder Part Number

FNC	64	S	10	6	30V	1024	–	R2

Housing:
64 : 64mm
80 : 80mm

Flange Type:
S : Servo flange
B : Clamping flange

Shaft diameter : 4, 6, 8, 10, 12
Other dimensions on request

Output Channels
1 : A
2 : AB
3 : ABZ
4 : AB+A' B'
6 : ABZ+A' B' Z'

Electrical Connections:

Cable
R2 : radial 2m, shield not connected (standart)
A2 : axial 2m, shield not connected (standart)

Connector:

R1204	R1607
R1205	R1614
R1208	R2312R
R1212	R2312L

PPR Options :

1 to 128 - 25 - 50 - 100 - 200 - 250 - 300 - 360 - 400 - 500 - 512 - 600 - 720 - 800 - 900 - 1000 - 1024 - 1250 - 2000 - 2048 - 2500 - 3000 - 3600 - 4000 - 4096 - 5000

Supply Voltage and output circuit :

5V : 5V in / out
245V : 5-30V in 5V out
30V : 5-30V in / out

FNC 68K ALM Series

Features

- **Industry 68 mm special size, square flange**
- **Robust mechanical and electrical construction**
- **Protection up to IP67**
- **Up to 5.000 PPR max.**
- **<300 kHz frequency**

PPR Options :

1 to 128 - 25 - 50 - 100 - 200 - 250 - 300 - 360 - 400 - 500 - 512 - 600 - 720 - 800 - 900 - 1000 - 1024 - 1250 - 2000 - 2048 - 2500 - 3000 - 3600 - 4000 - 4096 - 5000

Technical data - electrical ratings

Voltage supply	4.75VDC to 30VDC 4.75VDC to 5.5VDC
Protection:	Output short circuit protection. Reverse polarity protection (except 5V version)
Consumption w/o load	≤60 mA (24 VDC)
Resolution (steps/turn)	1...5.000 up to 65536
Reference signal	Zero pulse, width 90° 180°, 360° optional
Optoelectronic life time	100.000 (min)
Output frequency	>200 kHz
Output signals	90° shifted A and B, Z + inverted
Output circuit	Linedriver/RS422 Push-pull short-circuit proof NPN Open Collector
Interference immunity	DIN EN 61000-6-2
Emitted interference	DIN EN 61000-6-4
Approval	CE

Technical data - mechanical design

Dimensions (flange)	ø68 mm
Shaft loading	≤120 N axial ≤160 N radial
Protection DIN EN 60529	IP54, IP65
Operating speed	≤10000 rpm
Starting torque	≤0.025 Nm (IP 67)
Materials	Housing: Aluminium Flange: Aluminium Shaft : Stainless steel
Shaft diameter:	4, 6, 8, 10, 12, 14, 15 mm (other diameters on request)
Bearings lifetime:	$2x10^9$ rev. at 100% of full rated shaft load (minimum)
Operating temperature	-20...+85 °C
Storage temperature	-30 °C up to +90 °C
Weight approx.	200 g

Accessories

Connectors and cables
See page 206

Mounting coupling
See page 204

Mounting accessories
See page 202-203

FNC 68K ALM Series

Mechanical Dimensions

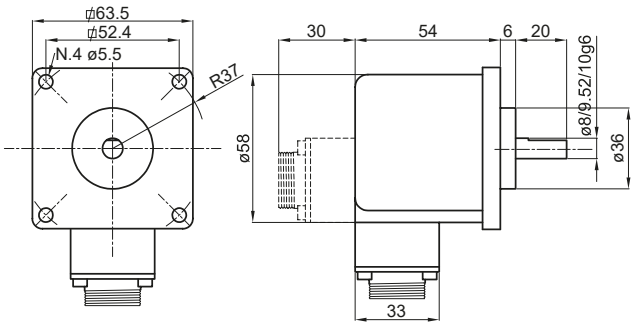

Pulse Diagram

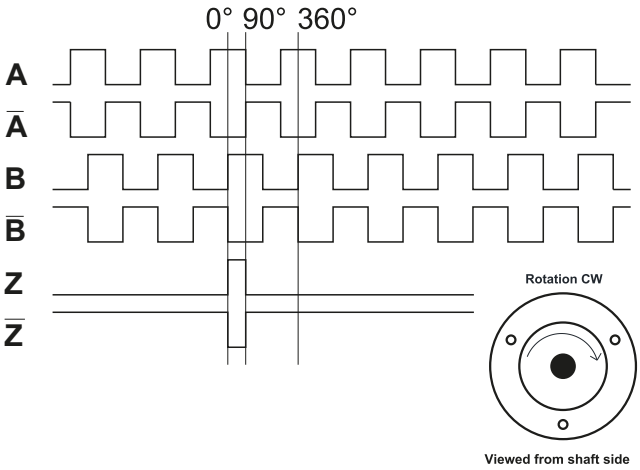

Connector Wiring

Please consult factory

Cable Wiring

Function	Color	Renk	Explanation
+VB	Brown	Kahve	Supply Voltage
GND	White	Beyaz	Ground
A	Green	Yeşil	A Channel
A'	Red	Kırmızı	A Inverted Channel
B	Yellow	Sarı	B Channel
B'	Pink	Pembe	B Inverted Channel
Z	Gray	Gri	Z Channel
Z'	Blue	Mavi	Z Inverted Channel
Shield	Black	Siyah	Shield

Encoder Part Number

FNC | 68 | K | 10 | 6 | 30V | 1024 | – | R2

Housing:
63 : 68mm

Flange Type:
K : Square flange, 36mm clamp
D : Square flange, 32mm clamp

Shaft diameter : 4, 6, 8, 10, 12, 14, 15
Other dimensions on request

Output Channels
1 : A
2 : AB
3 : ABZ
4 : AB+A' B'
6 : ABZ+A' B' Z'

Electrical Connections:

Cable
R2 : radial 2m, shield not connected (standart)
A2 : axial 2m, shield not connected (standart)

Connector:

R1204	R1607
R1205	R1614
R1208	R2312R
R1212	R2312L

PPR Options :

1 to 128 - 25 - 50 - 100 - 200 - 250 - 300 - 360 - 400 - 500 - 512 - 600 - 720 - 800 - 900 - 1000 - 1024 - 1250 - 2000 - 2048 - 2500 - 3000 - 3600 - 4000 - 4096 - 5000

Supply Voltage and output circuit :

5V : 5V in / out
245V : 5-30V in 5V out
30V : 5-30V in / out

FNC 115S Series, tacho flange

Features

- **Digital Tachogenarator with robust tacho flange**
- **Industry 115 mm standart size**
- **High noise immunity against frequency inverters**
- **Protection up to IP67**
- **Up to 65.536 PPR max.**
- **<300 kHz frequency**

PPR Options :

1 to 65.536 - 25 - 50 - 100 - 200 - 250 - 300 - 360 - 400 - 500 512 - 600 - 720 - 800 - 900 - 1000 - 1024 - 1250 - 2000 - 2048 - 2500 - 3000 - 3600 - 4000 - 4096 - 5000

Technical data - electrical ratings

Voltage supply	4.75VDC to 30VDC 4.75VDC to 5.5VDC
Protection:	Output short circuit protection. Reverse polarity protection (except 5V version)
Consumption w/o load	≤60 mA (24 VDC)
Resolution (steps/turn)	1...up to 65536
Reference signal	Zero pulse, width 90° 180°, 360° optional
Optoelectronic life time	100.000 (min)
Output frequency	>200 kHz
Output signals	90° shifted A and B, Z + inverted
Output circuit	Linedriver/RS422 Push-pull short-circuit proof NPN Open Collector
Interference immunity	DIN EN 61000-6-2
Emitted interference	DIN EN 61000-6-4
Approval	CE

Technical data - mechanical design

Dimensions (flange)	ø115 mm
Shaft loading	≤120 N axial ≤160 N radial
Protection DIN EN 60529	IP54, IP65
Operating speed	≤10000 rpm
Starting torque	≤0.025 Nm (IP 67)
Materials	Housing: Aluminium Flange: Aluminium Shaft : Stainless steel
Shaft diameter:	6, 8, 10, 12 mm (other diameters on request)
Bearings lifetime:	$2x10^9$ rev. at 100% of full rated shaft load (minimum)
Operating temperature	-20...+85 °C
Storage temperature	-30 °C up to +90 °C
Weight approx.	500 g

Accessories

Connectors and cables
CRM1208 M12 8 poles female connector or see page 206

Mounting coupling
MK301111 plastic or see page 204

Mounting accessories
YY RST Spring or see page 202-203

FNC 115S Series, tacho flange

Mechanical Dimensions

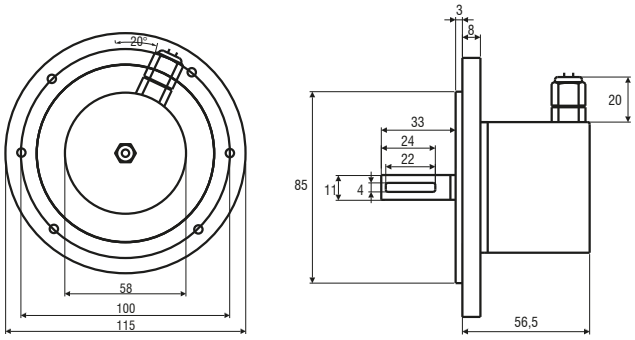

Pulse Diagram

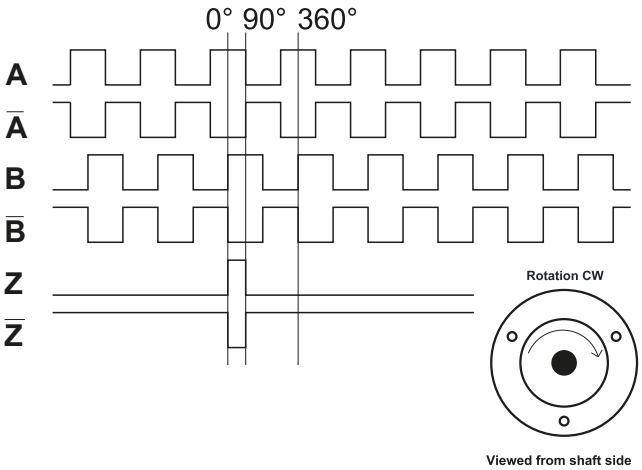

Connector Wiring

Connector Type	+Vcc	GND	A	A'	B	B'	Z	Z'	Shield
CRM1204	1	2	3		4				o.r.
CRM1205	1	2	3		4		5		o.r.
CRM1208	1	2	3	6	4	7	5	8	o.r.
CRM1212	1	2	3	6	4	7	5	8	o.r.
CRM1607	1	2	3		4		5		o.r.
CRM1614	Customer Specific								o.r.
CRM2312R	2-12	10-11	5	6	8	1	3	4	o.r.
CRM2312L	2-12	10-11	5	6	8	1	3	4	o.r.

For further information please see page 206

Cable Wiring

Function	Color	Renk	Explanation
+VB	Brown	Kahve	Supply Voltage
GND	White	Beyaz	Ground
A	Green	Yeşil	A Channel
A'	Red	Kırmızı	A Inverted Channel
B	Yellow	Sarı	B Channel
B'	Pink	Pembe	B Inverted Channel
Z	Gray	Gri	Z Channel
Z'	Blue	Mavi	Z Inverted Channel
Shield	Black	Siyah	Shield

Encoder Part Number

FNC 115 S 11 6 30V 1024 – R2

Housing:
115 : 115mm

Flange Type:
S : Servo (Tacho) flange

Shaft diameter : 10,11
Other dimensions on request

Output Channels
1 : A
2 : AB
3 : ABZ
4 : AB+A' B'
6 : ABZ+A' B' Z'

Electrical Connections:

Cable
R2 : radial 2m, shield not connected (standart)
A2 : axial 2m, shield not connected (standart)

Connector:

R1204	R1607
R1205	RM1614
R1208	RM2312R
R1212	RM2312L

PPR Options :

1 to 65.536 - 25 - 50 - 100 - 200 - 250 - 300 - 360 - 400 - 500 - 512 - 600 - 720 - 800 - 900 - 1000 - 1024 - 1250 - 2000 - 2048 - 2500 - 3000 - 3600 - 4000 - 4096 - 5000

Supply Voltage and output circuit :

5V : 5V in / out
245V : 5-30V in 5V out
30V : 5-30V in / out

FNC 30E Series

Features

- **Industry 30 mm special size, servo flange**
- **Robust mechanical and electrical construction**
- **Protection up to IP67**
- **Up to 2500 PPR max.**
- **<300 kHz frequency**

PPR Options :

1 to- 1024 all PPR, - 360 - 500 - 512 - 720 - 1000 - 1024
1440 - 2000 - 2048 -2500

Technical data - electrical ratings

Voltage supply	4.75VDC to 30VDC 4.75VDC to 5.5VDC
Protection:	Output short circuit protection. Reverse polarity protection (except 5V version)
Consumption w/o load	≤30 mA (24 VDC)
Resolution (steps/turn)	1...2500
Reference signal	Zero pulse, width 90° 180°, 360° optional
Optoelectronic life time	100.000 (min)
Output frequency	>200 kHz
Output signals	90° shifted A and B, Z + inverted
Output circuit	Linedriver/RS422 Push-pull short-circuit proof NPN Open Collector
Interference immunity	DIN EN 61000-6-2
Emitted interference	DIN EN 61000-6-4
Approval	CE

Technical data - mechanical design

Dimensions (flange)	ø30 mm
Shaft loading	≤20 N axial ≤30 N radial
Protection DIN EN 60529	IP54, IP65
Operating speed	≤10000 rpm
Starting torque	≤0.01 Nm (IP 67)
Materials	Housing: stainless steel Flange: stainless steel Shaft : stainless steel
Shaft Diameter:	4, 6, 8 mm (other diameters on request)
Bearings lifetime:	$2x10^9$ rev. at 100% of full rated shaft load (minimum)
Operating temperature	-20...+85 °C
Storage temperature	-30 °C up to +90 °C
Weight approx.	80 g

Accessories

Connectors and cables
See page 206

Mounting coupling
See page 204

Mounting accessories
See page 202-203

FNC 30E Series

Mechanical Dimensions

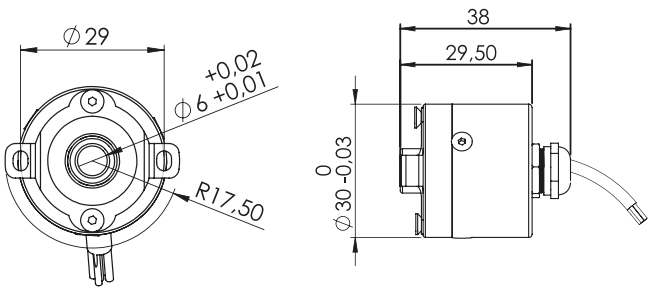

Pulse Diagram

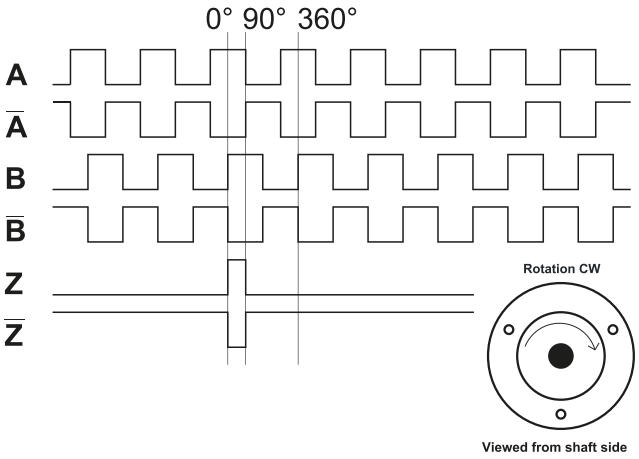

Connector Wiring

Connector Type	+Vcc	GND	A	A'	B	B'	Z	Z'	Shield
CRM1204	1	2	3		4				o.r.
CRM1205	1	2	3		4		5		o.r.
CRM1208	1	2	3	6	4	7	5	8	o.r.
CRM1212	1	2	3	6	4	7	5	8	o.r.
CRM1607	1	2	3		4		5		o.r.
CRM1614	Customer Specific								o.r.

For further information please see page 206

Cable Wiring

Function	Color	Renk	Explanation
+VB	Brown	Kahve	Supply Voltage
GND	White	Beyaz	Ground
A	Green	Yeşil	A Channel
A'	Red	Kırmızı	A Inverted Channel
B	Yellow	Sarı	B Channel
B'	Pink	Pembe	B Inverted Channel
Z	Gray	Gri	Z Channel
Z'	Blue	Mavi	Z Inverted Channel
Shield	Black	Siyah	Shield

Encoder Part Number

FNC | 30 | E | 6 | 6 | 30V | 1000 | – | R2

Housing:
30 : 30mm

Flange Type:
E : End hollow shaft

Shaft diameter : 4, 6, 8
Other dimensions on request

Output Channels
1 : A
2 : AB
3 : ABZ
4 : AB+A' B'
6 : ABZ+A' B' Z'

Electrical Connections:

Cable
A2 : axial 2m, Total length 25 mm
R2 : radial Total length 35 mm

Connector:
R1204 R1212
R1205 R1607
R1208 R1614

PPR Options :
1 to- 1024 all PPR, - 360 - 500 - 512 - 720 - 1000 - 1024 - 1440 - 2000 - 2048 - 2500

Supply Voltage and output circuit :
5V : 5V in / out
245V : 5-30V in 5V out
30V : 5-30V in / out

FNC 40E Series

Features

- **Industry 40 mm size, 20mm diameter clamping flange**
- **Universal 40 mm encoders**
- **Robust Mechanical and Electrical Construction**
- **Protection to IP65**
- **Up to 4096 PPR max.**
- **<300 kHz frequency**

PPR Options :

1 to 1024 ALL PPR - 2048 - 4096

Technical data - electrical ratings

Voltage supply	4.75VDC to 30VDC HTL 4.75VDC to 5.5VDC TTL
Protection:	Output short circuit protection. Reverse polarity protection (except 5V version)
Consumption w/o load	≤60 mA (24 VDC)
Resolution (steps/turn)	1...4096
Reference signal	Zero pulse, width 90° 180°, 360° optional
Optoelectronic life time	100.000 (min)
Output frequency	>200 kHz
Output signals	90° shifted A and B, Z + inverted
Output circuit	Linedriver/RS422 Push-pull short-circuit proof NPN Open Collector
Interference immunity	DIN EN 61000-6-2
Emitted interference	DIN EN 61000-6-4
Approval	CE

Technical data - mechanical design

Dimensions (flange)	ø40 mm
Shaft loading	≤60 N axial ≤80 N radial
Protection DIN EN 60529	IP54, IP65
Operating speed	≤10000 rpm
Starting torque	≤0.020 Nm (IP 67)
Materials	Housing: Aluminium Flange: Aluminium Shaft : Stainless steel
Shaft diameter:	4, 5, 6, 8 mm (other diameters on request)
Bearings lifetime:	$2x10^9$ rev. at 100% of full rated shaft load (minimum)
Operating temperature	-20...+85 °C
Storage temperature	-30 °C up to +90 °C
Weight approx.	150 g

Accessories

Connectors and cables
CRM1204 M12 4 poles female connector or see page 206

Mounting coupling
See page 204

Mounting accessories
YY RST Spring or see page 202-203

FNC 40E Series

Mechanical Dimensions

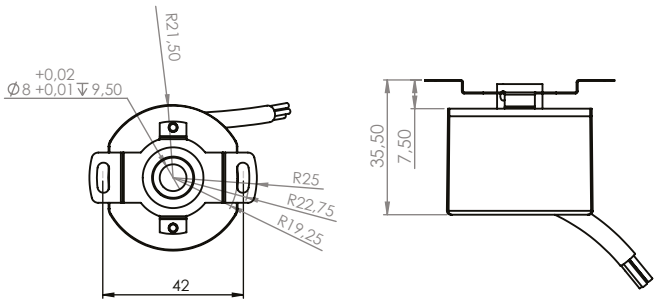

Pulse Diagram

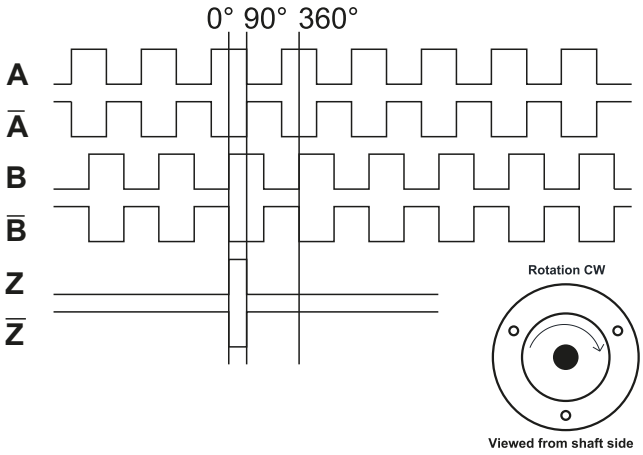

Connector Wiring

Connector Type	+Vcc	GND	A	A'	B	B'	Z	Z'	Shield
CRM1204	1	2	3		4				o.r.
CRM1205	1	2	3		4		5		o.r.
CRM1208	1	2	3	6	4	7	5	8	o.r.
CRM1212	1	2	3	6	4	7	5	8	o.r.
CRM1607	1	2	3		4		5		o.r.
CRM1614	Customer Specific								o.r.

For further information please see page 206

Cable Wiring

Function	Color	Renk	Explanation
+VB	Brown	Kahve	Supply Voltage
GND	White	Beyaz	Ground
A	Green	Yeşil	A Channel
A'	Red	Kırmızı	A Inverted Channel
B	Yellow	Sarı	B Channel
B'	Pink	Pembe	B Inverted Channel
Z	Gray	Gri	Z Channel
Z'	Blue	Mavi	Z Inverted Channel
Shield	Black	Siyah	Shield

Encoder Part Number

FNC | 40 | E | 6 | 6 | 30V | 1024 | – | R2

Housing:
40 : 40mm

Flange Type:
E : End shaft

Shaft diameter : 4, 5, 6, 8 mm
Other dimensions on request

Output Channels
1 : A
2 : AB
3 : ABZ
4 : AB+A' B'
6 : ABZ+A' B' Z'

Electrical Connections:

Cable
R2 : radial 2m, shield not connected (standart)
A2 : axial 2m, shield not connected (standart)

Connector:

R1204	R1212
R1205	R1607
R1208	R1614

PPR Options :

1 to 1024 - 2048 - 4096

Supply Voltage and output circuit :

5V : 5V in / out
245V : 5-30V in 5V out
30V : 5-30V in / out

FNC 40H Series

Features

- **Industry 40 mm size**
- **Universal 40 mm encoders**
- **Robust Mechanical and Electrical Construction**
- **Protection to IP65**
- **Up to 4096 PPR max.**
- **<300 kHz frequency**

PPR Options :

600-1200-2400-625-1250-2500
750-1500-3000-900-1800-3600-
1024-2048-4096

Technical data - electrical ratings

Voltage supply	4.75VDC to 30VDC 4.75VDC to 5.5VDC
Protection:	Output short circuit protection. Reverse polarity protection (except 5V version)
Consumption w/o load	≤60 mA (24 VDC)
Resolution (steps/turn)	up to 4096 ppr
Reference signal	Zero pulse, width 90° 180°, 360° optional
Optoelectronic life time	100.000 (min)
Output frequency	>200 kHz
Output signals	90° shifted A and B, Z + inverted
Output circuit	Linedriver/RS422 Push-pull short-circuit proof NPN Open Collector
Interference immunity	DIN EN 61000-6-2
Emitted interference	DIN EN 61000-6-4
Approval	CE

Technical data - mechanical design

Dimensions (flange)	ø40 mm
Shaft loading	≤60 N axial ≤80 N radial
Protection DIN EN 60529	IP54, IP65
Operating speed	≤10000 rpm
Starting torque	≤0.020 Nm (IP 67)
Materials	Housing: Aluminium Flange: Aluminium Shaft : Stainless steel
Shaft diameter:	4,6,8, 10 mm (other diameters on request)
Bearings lifetime:	$2x10^9$ rev. at 100% of full rated shaft load (minimum)
Operating temperature	-20...+85 °C
Storage temperature	-30 °C up to +90 °C
Weight approx.	100 g

Accessories

Connectors and cables
CRM1204 M12 4 poles female connector or see page 206

Mounting coupling
SK240606 plastic or see page 204

Mounting accessories
YY RST Spring or see page 202-203

FNC 40H Series

Mechanical Dimensions

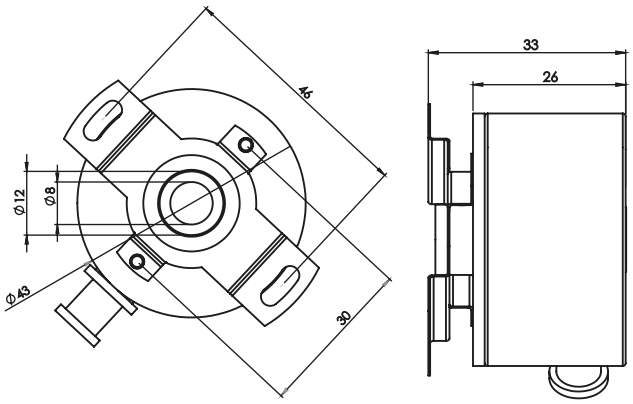

Pulse Diagram

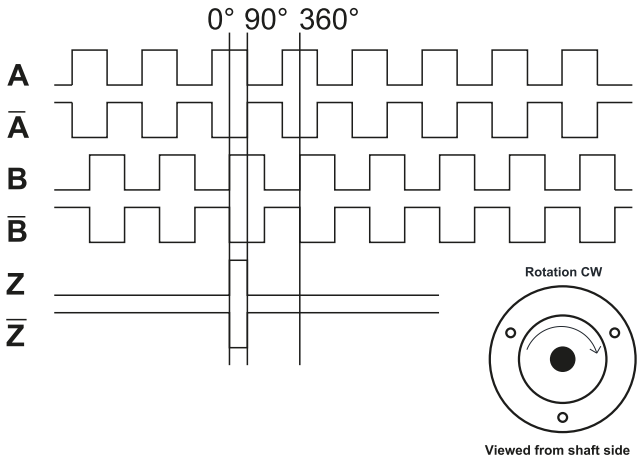

Connector Wiring

Connector Type	+Vcc	GND	A	A'	B	B'	Z	Z'	Shield
CRM1204	1	2	3		4				o.r.
CRM1205	1	2	3		4		5		o.r.
CRM1208	1	2	3	6	4	7	5	8	o.r.
CRM1212	1	2	3	6	4	7	5	8	o.r.
CRM1607	1	2	3		4		5		o.r.
CRM1614	Customer Specific								o.r.

For further information please see page 206

Cable Wiring

Function	Color	Renk	Explanation
+VB	Brown	Kahve	Supply Voltage
GND	White	Beyaz	Ground
A	Green	Yeşil	A Channel
A'	Red	Kırmızı	A Inverted Channel
B	Yellow	Sarı	B Channel
B'	Pink	Pembe	B Inverted Channel
Z	Gray	Gri	Z Channel
Z'	Blue	Mavi	Z Inverted Channel
Shield	Black	Siyah	Shield

Encoder Part Number

FNC | 40 | H | 6 | 6 | 30V | 1024 – R2

Housing:
40 : 40mm

Flange Type:
H: Hollow shaft

Shaft diameter: 4,6,8,10 mm
Other dimensions on request

Output Channels
1 : A
2 : AB
3 : ABZ
4 : AB+A' B'
6 : ABZ+A' B' Z'

Electrical Connections:

Cable
R2 : radial 2m, shield not connected (standart)
A2 : axial 2m, shield not connected (standart)

Connector:

R1204	R1212
R1205	R1607
R1208	R1614

PPR Options :
600-1200-2400-625-1250-2500
750-1500-3000-900-1800-3600-
1024-2048-4096

Supply Voltage and output circuit :
5V : 5V in / out
245V : 5-30V in 5V out
30V : 5-30V in / out

FNC 50E Series

Features

- **Industry 50 mm standart size, semi hollow shaft**
- **Robust Mechanical and Electrical Construction**
- **Protection to IP65**
- **Up to 5000 PPR max.**
- **<300 kHz frequency**

PPR Options :

1 to 128 - 25 - 50 - 100 - 200 - 250 - 300 - 360 - 400 - 500 - 512 - 600 - 720 - 800 - 900 - 1000 - 1024 - 1250 - 1440 - 2000 - 2048 - 2500 - 3000 - 3600 - 4000 - 5000

Technical data - electrical ratings

Voltage supply	4.75VDC to 30VDC 4.75VDC to 5.5VDC
Protection:	Output short circuit protection. Reverse polarity protection (except 5V version)
Consumption w/o load	≤60 mA (24 VDC)
Resolution (steps/turn)	1...5000 up to 65536
Reference signal	Zero pulse, width 90° 180°, 360° optional
Optoelectronic life time	100.000 (min)
Output frequency	>200 kHz
Output signals	90° shifted A and B, Z + inverted
Output circuit	Linedriver/RS422 Push-pull short-circuit proof NPN Open Collector
Interference immunity	DIN EN 61000-6-2
Emitted interference	DIN EN 61000-6-4
Approval	CE

Technical data - mechanical design

Dimensions (flange)	ø50 mm
Shaft loading	≤80 N axial ≤100 N radial
Protection DIN EN 60529	IP54, IP65
Operating speed	≤10000 rpm
Starting torque	≤0.025 Nm (IP 67)
Materials	Housing: Aluminium Flange: Aluminium Shaft : Stainless steel
Shaft diameter:	6, 8, 10 mm (other diameters on request)
Bearings lifetime:	$2x10^9$ rev. at 100% of full rated shaft load (minimum)
Operating temperature	-20...+85 °C
Storage temperature	-30 °C up to +90 °C
Weight approx.	150 g

Accessories

Connectors and cables
See page 206

Mounting coupling
See page 204

Mounting accessories
YY AKR Spring or see page 202-203

FNC 50E Series

Mechanical Dimensions

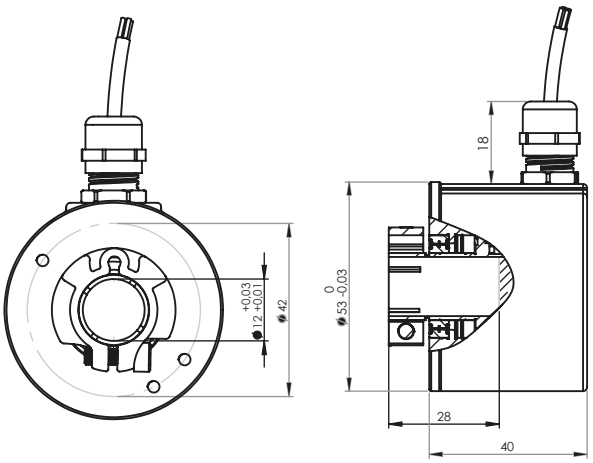

Pulse Diagram

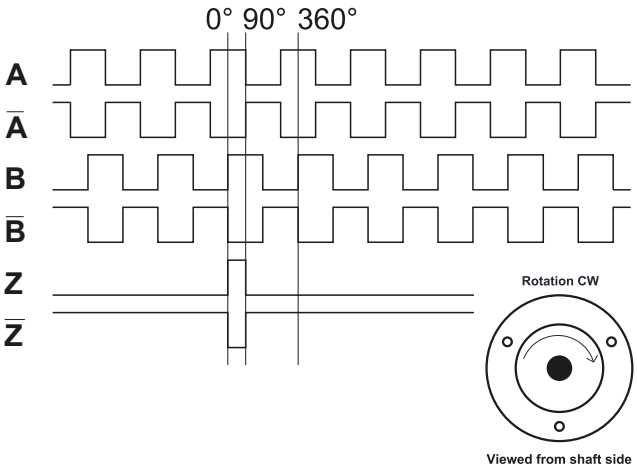

Connector Wiring

Connector Type	+Vcc	GND	A	A'	B	B'	Z	Z'	Shield
CRM1204	1	2	3		4				o.r.
CRM1205	1	2	3		4		5		o.r.
CRM1208	1	2	3	6	4	7	5	8	o.r.
CRM1212	1	2	3	6	4	7	5	8	o.r.
CRM1607	1	2	3		4		5		o.r.
CRM1614	Customer Specific								o.r.

For further information please see page 206

Cable Wiring

Function	Color	Renk	Explanation
+VB	Brown	Kahve	Supply Voltage
GND	White	Beyaz	Ground
A	Green	Yeşil	A Channel
A'	Red	Kırmızı	A Inverted Channel
B	Yellow	Sarı	B Channel
B'	Pink	Pembe	B Inverted Channel
Z	Gray	Gri	Z Channel
Z'	Blue	Mavi	Z Inverted Channel
Shield	Black	Siyah	Shield

Encoder Part Number

FNC | 50 | E | 10 | 6 | 30V | 1024 | - | R2

Housing:
50 : 50mm

Flange Type:
E : End hollow shaft

Shaft diameter : 4, 6, 8, 10, 12, 14
Other dimensions on request

Output Channels
1 : A
2 : AB
3 : ABZ
4 : AB+A' B'
6 : ABZ+A' B' Z'

Electrical Connections:

Cable
R2 : radial 2m, shield not connected (standart)

Connector:

R1204	R1212
R1205	R1607
R1208	R1614

PPR Options :

1 to 128 - 25 - 50 - 100 - 200 - 250 - 300 - 360 - 400 - 500 - 512 - 600 - 720 - 800 - 900 - 1000 - 1024 - 1250 - 2000 - 2048 - 2500 - 3000 - 3600 - 4000 - 5000

Supply Voltage and output circuit :

5V : 5V in / out
245V : 5-30V in 5V out
30V : 5-30V in / out

FNC 50H Series

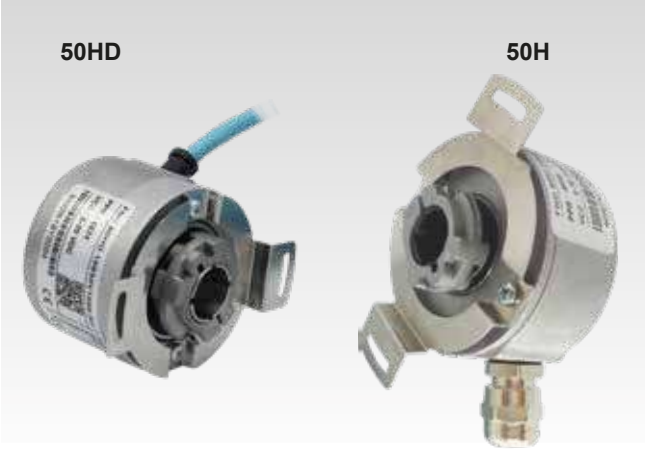

Features

- **Industry 50 mm standart size, through hollow shaft**
- **Robust Mechanical and Electrical Construction**
- **Protection to IP65**
- **Up to 5000 PPR max.**
- **<300 kHz frequency**

PPR Options :

750 - 900 - 1000 - 1024 - 1250 - 1500 - 1800 - 2000 - 2048 - 2500 - 3000 - 3600 - 4000 - 4096 - 5000

Technical data - electrical ratings

Voltage supply	4.75VDC to 30VDC 4.75VDC to 5.5VDC
Protection:	Output short circuit protection. Reverse polarity protection (except 5V version)
Consumption w/o load	≤60 mA (24 VDC)
Resolution (steps/turn)	1...5000 up to 65536
Reference signal	Zero pulse, width 90° 180°, 360° optional
Optoelectronic life time	100.000 (min)
Output frequency	<300 kHz
Output signals	90° shifted A and B, Z + inverted
Output circuit	Linedriver/RS422 Push-pull short-circuit proof NPN Open Collector
Interference immunity	DIN EN 61000-6-2
Emitted interference	DIN EN 61000-6-4
Approval	CE

Technical data - mechanical design

Dimensions (flange)	ø50 mm
Shaft loading	≤80 N axial ≤100 N radial
Protection DIN EN 60529	IP54, IP65
Operating speed	≤10000 rpm
Starting torque	≤0.025 Nm (IP 67)
Materials	Housing: Aluminium Flange: Aluminium Shaft : Stainless steel
Shaft diameter:	6, 8, 10, 12, 14, 15 mm (other diameters on request)
Bearings lifetime:	$2x10^9$ rev. at 100% of full rated shaft load (minimum)
Operating temperature	-20...+85 °C
Storage temperature	-30 °C up to +90 °C
Weight approx.	150 g

Accessories

Connectors and cables
See page 206

Mounting coupling
See page 204

Mounting accessories
YY AKR Spring or see pag 202-203

Connector Wiring

Connector Type	+Vcc	GND	A	A'	B	B'	Z	Z'	Shield
CRM1204	1	2	3		4				o.r.
CRM1205	1	2	3		4		5		o.r.
CRM1208	1	2	3	6	4	7	5	8	o.r.
CRM1212	1	2	3	6	4	7	5	8	o.r.
CRM1607	1	2	3		4		5		o.r.
CRM1614	Customer Specific								o.r.

For further information please see page 206

FNC 50H Series

Mechanical Dimensions

50H

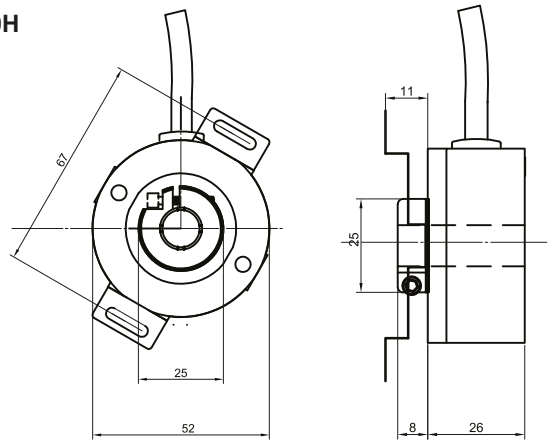

50HD

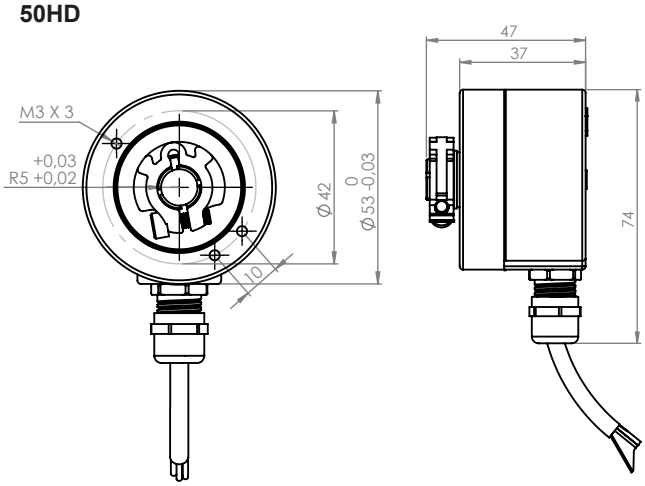

Pulse Diagram

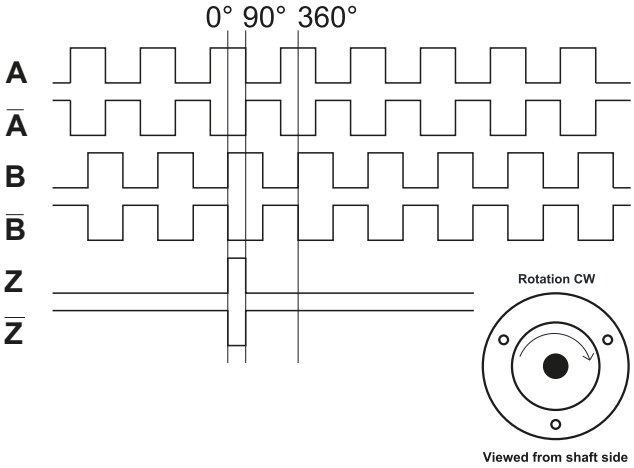

Cable Wiring

Function	Color	Renk	Explanation
+VB	Brown	Kahve	Supply Voltage
GND	White	Beyaz	Ground
A	Green	Yeşil	A Channel
A'	Red	Kırmızı	A Inverted Channel
B	Yellow	Sarı	B Channel
B'	Pink	Pembe	B Inverted Channel
Z	Gray	Gri	Z Channel
Z'	Blue	Mavi	Z Inverted Channel
Shield	Black	Siyah	Shield

Encoder Part Number

FNC	50	H	10	6	30V	1024	–	R2

Housing:
50 : 50mm

Flange Type:
E : End hollow
H : Through hollow shaft
HD : Thicker version of 50H

Shaft diameter : 6, 8, 10, 12, 14, 15 mm
Other dimensions on request

Output Channels
1 : A
2 : AB
3 : ABZ
4 : AB+A' B'
6 : ABZ+A' B' Z'

Electrical Connections:

Cable
R2 : radial 2m, shield not connected (standart)

Connector:

R1204	R1212
R1205	R1607
R1208	R1614

PPR Options :

750 - 900 - 1000 - 1024 - 1250 - 1500 - 1800 - 2000 - 2048 - 2500 - 3000 - 3600 - 4000 - 4096 - 5000

Supply Voltage and output circuit :

5V : 5V in / out
245V : 5-30V in 5V out
30V : 5-30V in / out

FNC 50HB & 50HT Series

Features

- **Industry 50 mm standart size, tapered shaft**
- **Robust Mechanical and Electrical Construction**
- **Protection up to IP67**
- **Up to 65.536 PPR max.**
- **<300 kHz frequency**

PPR Options :

1024 - 2048 - 4096 - 5000 - 8192 - 10.000 standard PPRs
1 to 65.536 optional

Technical data - electrical ratings

Voltage supply	4.75VDC to 30VDC 4.75VDC to 5.5VDC
Protection:	Output short circuit protection. Reverse polarity protection (except 5V version)
Consumption w/o load	≤60 mA (24 VDC)
Resolution (steps/turn)	1...65536
Reference signal	Zero pulse, width 90° 180°, 360° optional
Optoelectronic life time	100.000 (min)
Output frequency	<300 kHz
Output signals	90° shifted A and B, Z + inverted
Output circuit	Linedriver/RS422 Push-pull short-circuit proof NPN Open Collector
Interference immunity	DIN EN 61000-6-2
Emitted interference	DIN EN 61000-6-4
Approval	CE

Technical data - mechanical design

Dimensions (flange)	ø50 mm
Shaft loading	≤80 N axial ≤100 N radial
Protection DIN EN 60529	IP54, IP65
Operating speed	≤10000 rpm
Starting torque	≤0.025 Nm (IP 67)
Materials	Housing: Aluminium Flange: Aluminium Shaft : Stainless steel
Shaft diameter:	1/10 conic shaft
Bearings lifetime:	$2x10^9$ rev. at 100% of full rated shaft load (minimum)
Operating temperature	-20...+85 °C
Storage temperature	-30 °C up to +90 °C
Weight approx.	150 g

Accessories

Connectors and cables
See page 206

Mounting coupling
See page 204

Mounting accessories
YY AKR Spring or see page 202-203

Pulse Diagram

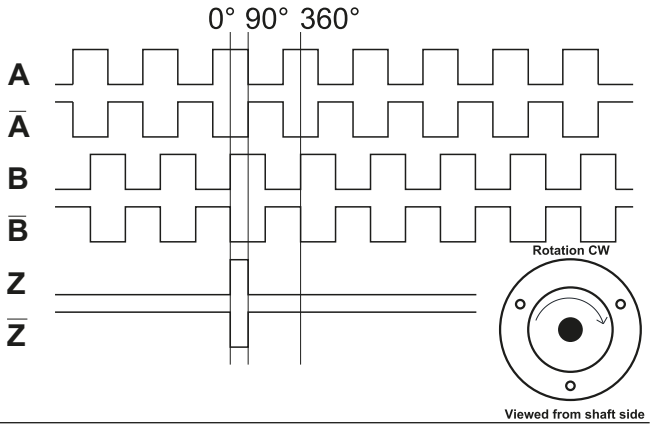

FNC 50HB & 50HT Series

Mechanical Dimensions

50HB

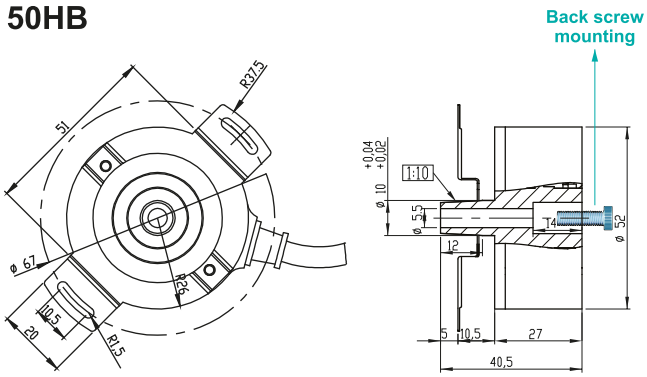

50HT

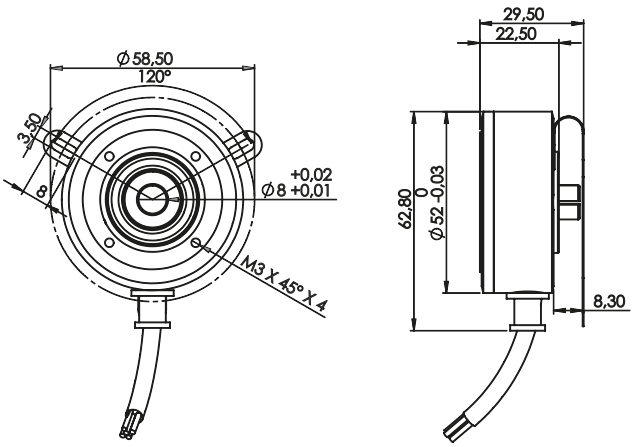

Cable Wiring

Function	Color	Renk	Explanation
+VB	Brown	Kahve	Supply Voltage
GND	White	Beyaz	Ground
A	Green	Yeşil	A Channel
A'	Red	Kırmızı	A Inverted Channel
B	Yellow	Sarı	B Channel
B'	Pink	Pembe	B Inverted Channel
Z	Gray	Gri	Z Channel
Z'	Blue	Mavi	Z Inverted Channel
Shield	Black	Siyah	Shield

Connector Wiring

Connector Type	+Vcc	GND	A	A'	B	B'	Z	Z'	Shield
CRM1204	1	2	3		4				o.r.
CRM1205	1	2	3		4		5		o.r.
CRM1208	1	2	3	6	4	7	5	8	o.r.
CRM1212	1	2	3	6	4	7	5	8	o.r.
CRM1607	1	2	3		4		5		o.r.
CRM1614	Customer Specific								o.r.
CRM2312R	2-12	10-11	5	6	8	1	3	4	o.r.
CRM2312L	2-12	10-11	5	6	8	1	3	4	o.r.

For further information please see page 206

Encoder Part Number

FNC | 50 | HB | C | 6 | 30V | 8192 – R2

Housing:
50 : 50mm

Flange Type:
HB : Conic shaft back screw mounting
HT : Thin version of 50H

Shaft diameter : 1/10 conic shaft
Other dimensions on request

Output Channels
1 : A
2 : AB
3 : ABZ
4 : AB+A' B'
6 : ABZ+A' B' Z'

Electrical Connections:

Cable
R2 : radial 2m, shield not connected (standart)

Connector:
R1204 R1212
R1205 R1607
R1208 R1614

PPR Options :
1024 - 2048 - 4096 - 5000 - 8192 - 10.000 standard PPRs
1 to 65.536 optional

Supply Voltage and output circuit :
5V : 5V in / out
245V : 5-30V in 5V out
30V : 5-30V in / out

FNC 58E & 58H Series

Features

- **Industry 58 mm standard size, end hollow shaft**
- **Robust mechanical and electrical construction**
- **Protection up to IP67**
- **Up to 65.536 PPR max.**
- **<300 kHz frequency**

PPR Options :

1 to 65.536 - 25 - 50 - 100 - 200 - 250 - 300 - 360 - 400 - 500 512 - 600 - 720 - 800 - 900 - 1000 - 1024 - 1250 - 1440 - 2000 - 2048 - 2500 - 3000 - 3600 - 4000 - 4096 - 5000 - 6000 - 8192 - 10000 - 12500 - 20000 - 25000

Technical data - electrical ratings

Voltage supply	4.75VDC to 30VDC 4.75VDC to 5.5VDC
Protection:	Output short circuit protection. Reverse polarity protection (except 5V version)
Consumption w/o load	≤60 mA (24 VDC)
Resolution (steps/turn)	up to 65536
Reference signal	Zero pulse, width 90° 180°, 360° optional
Optoelectronic life time	100.000 (min)
Output frequency	>200 kHz
Output signals	90° shifted A and B, Z + inverted
Output circuit	Linedriver/RS422 Push-pull short-circuit proof NPN Open Collector
Interference immunity	DIN EN 61000-6-2
Emitted interference	DIN EN 61000-6-4
Approval	CE

Technical data - mechanical design

Dimensions (flange)	ø58 mm
Shaft loading	≤120 N axial ≤160 N radial
Protection DIN EN 60529	IP54, IP65
Operating speed	≤10000 rpm
Starting torque	≤0.025 Nm (IP 67)
Materials	Housing: Aluminium Flange: Aluminium Shaft : Stainless steel
Shaft diameter:	6, 8, 10, 12, 14, 15, 16 mm (other diameters on request)
Bearings lifetime:	$2x10^9$ rev. at 100% of full rated shaft load (minimum)
Operating temperature	-20...+85 °C
Storage temperature	-30 °C up to +90 °C
Weight approx.	250 g

Accessories

Connectors and cables
CRM1607 M16 7 poles female connector or see page 206

Mounting coupling
See page 204

Mounting accessories
YY NGL spring or see page 202-203

Pulse Diagram

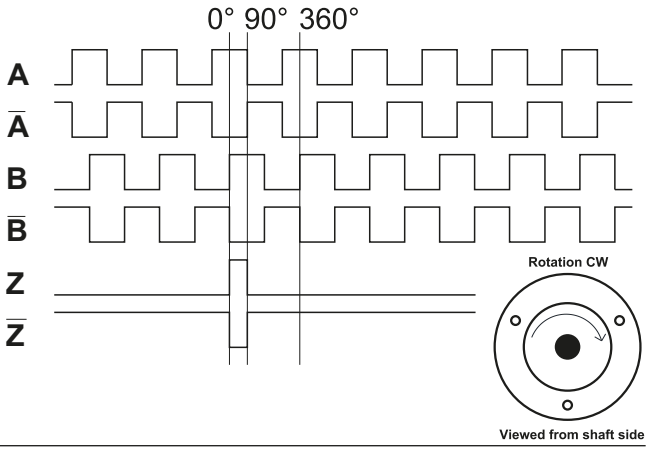

FNC 58E & 58H Series

Mechanical Dimensions

58E

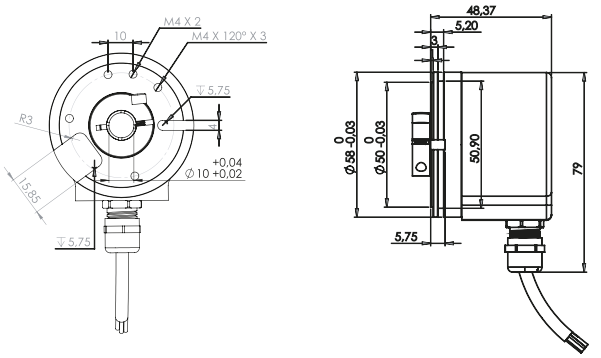

58H

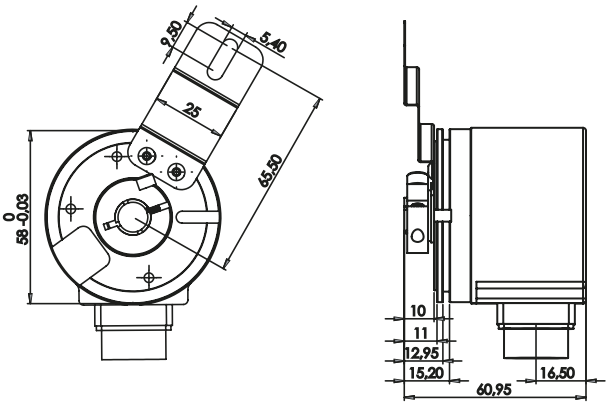

Connector Wiring

Connector Type	+Vcc	GND	A	A'	B	B'	Z	Z'	Shield
CRM1204	1	2	3		4				o.r.
CRM1205	1	2	3		4		5		o.r.
CRM1208	1	2	3	6	4	7	5	8	o.r.
CRM1212	1	2	3	6	4	7	5	8	o.r.
CRM1607	1	2	3		4		5		o.r.
CRM1614	Customer Specific								o.r.
CRM2312R	2-12	10-11	5	6	8	1	3	4	o.r.
CRM2312L	2-12	10-11	5	6	8	1	3	4	o.r.

For further information please see page 206

Cable Wiring

Function	Color	Renk	Explanation
+VB	Brown	Kahve	Supply Voltage
GND	White	Beyaz	Ground
A	Green	Yeşil	A Channel
A'	Red	Kırmızı	A Inverted Channel
B	Yellow	Sarı	B Channel
B'	Pink	Pembe	B Inverted Channel
Z	Gray	Gri	Z Channel
Z'	Blue	Mavi	Z Inverted Channel
Shield	Black	Siyah	Shield

Encoder Part Number

FNC | 58 | E | 8 | 6 | 30V | 1024 | – | R2

Housing:
58 : 58mm

Flange Type:
E : End hollow
H : Through hollow shaft

Shaft diameter : 4, 6, 8, 10, 12, 14, 15, 16
Other dimensions on request

Output Channels
1 : A
2 : AB
3 : ABZ
4 : AB+A' B'
6 : ABZ+A' B' Z'

Electrical Connections:

Cable
R2 : radial 2m, shield not connected (standart)

Connector:

R1204	R1607
R1205	R1614
R1208	R2312R
R1212	R2312L

PPR Options :
1 to 65.536 - 25 - 50 - 100 - 200 - 250 - 300 - 360 - 400 - 500 - 512 - 600 - 720 - 800 - 900 - 1000 - 1024 - 1250 - 1440 - 2000 - 2048 - 2500 - 3000 - 3600 - 4000 - 4096 - 5000 - 6000 - 8192 - 10000 - 12500 - 20000 - 25000 - 65.536

Supply Voltage and output circuit :
5V : 5V in / out
245V : 5-30V in 5V out
30V : 5-30V in / out

FNC 80H Series

Features

- **Industry 80 mm standard size, through hollow shaft**
- **Robust Mechanical and Electrical Construction**
- **Protection up to IP67**
- **Up to 10.000 PPR max.**
- **<300 kHz frequency**

PPR Options :

500 - 512 - 625 - 1000 - 1024 - 1200 - 1250 - 2000 - 2048 - 2500 - 4096 - 5000 - 8192 - 10.000

Technical data - electrical ratings

Voltage supply	4.75VDC to 30VDC 4.75VDC to 5.5VDC
Protection:	Output short circuit protection. Reverse polarity protection (except 5V version)
Consumption w/o load	≤60 mA (24 VDC)
Resolution (steps/turn)	1...25.000
Reference signal	Zero pulse, width 90° 180°, 360° optional
Optoelectronic life time	100.000 (min)
Output frequency	>200 kHz
Output signals	90° shifted A and B, Z + inverted
Output circuit	Linedriver/RS422 Push-pull short-circuit proof NPN Open Collector
Interference immunity	DIN EN 61000-6-2
Emitted interference	DIN EN 61000-6-4
Approval	CE

Technical data - mechanical design

Dimensions (flange)	ø80 mm
Shaft loading	≤120 N axial ≤160 N radial
Protection DIN EN 60529	IP54, IP65
Operating speed	≤10000 rpm
Starting torque	≤0.025 Nm (IP 67)
Materials	Housing: Aluminium Flange: Aluminium Shaft : Stainless steel
Shaft diameter:	10, 12, 14, 15, 16, 17, 18, 19, 20, 22, 24, 25 mm
Bearings lifetime:	$2x10^9$ rev. at 100% of full rated shaft load (minimum)
Operating temperature	-20...+85 °C
Storage temperature	-30 °C up to +90 °C
Weight approx.	250 g

Accessories

Connectors and cables
CRM2312R M23 12 poles female connector or see page 206

Mounting coupling
See page 204

Mounting accessories
YY ASTK spring or see page 202-203

FNC 80H Series

Mechanical Dimensions

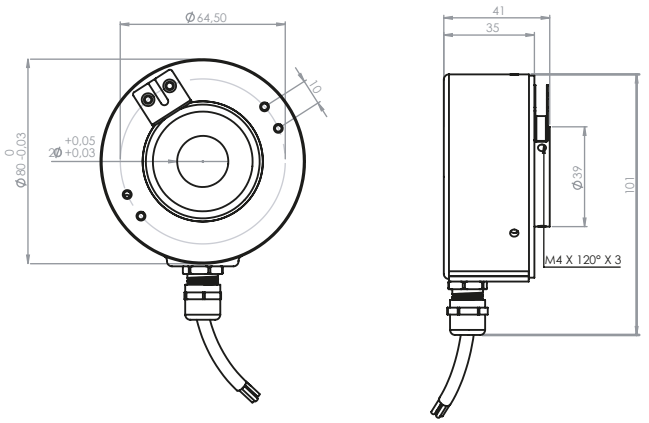

Pulse Diagram

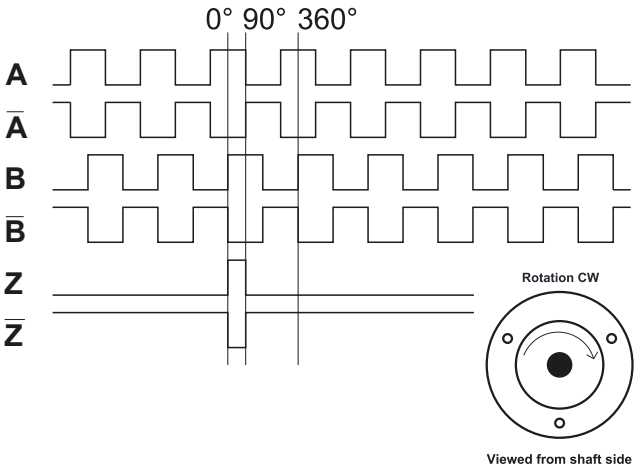

Connector Wiring

Connector Type	+Vcc	GND	A	A'	B	B'	Z	Z'	Shield
CRM1204	1	2	3		4				o.r.
CRM1205	1	2	3		4		5		o.r.
CRM1208	1	2	3	6	4	7	5	8	o.r.
CRM1212	1	2	3	6	4	7	5	8	o.r.
CRM1607	1	2	3		4		5		o.r.
CRM1614	Customer Specific								o.r.
CRM2312R	2-12	10-11	5	6	8	1	3	4	o.r.
CRM2312L	2-12	10-11	5	6	8	1	3	4	o.r.

For further information please see page 206

Cable Wiring

Function	Color	Renk	Explanation
+VB	Brown	Kahve	Supply Voltage
GND	White	Beyaz	Ground
A	Green	Yeşil	A Channel
A'	Red	Kırmızı	A Inverted Channel
B	Yellow	Sarı	B Channel
B'	Pink	Pembe	B Inverted Channel
Z	Gray	Gri	Z Channel
Z'	Blue	Mavi	Z Inverted Channel
Shield	Black	Siyah	Shield

Encoder Part Number

FNC | 80 | H | 25 | 6 | 30V | 1024 | — | R2

Housing:
80 : 80mm

Flange Type:
E : End hollow
H : Through hollow shaft

Shaft diameter : 10, 12, 14, 15, 16, 17, 18, 19, 20, 22, 24, 25
Other dimensions on request

Output Channels
1 : A
2 : AB
3 : ABZ
4 : AB+A' B'
6 : ABZ+A' B' Z'

Electrical Connections:

Cable
R2 : radial 2m, shield not connected (standart)

Connector:

RM1204	R1607
R1205	R1614
R1208	R2312R
R1212	R2312L

PPR Options :
500 - 512 - 625 - 1000 - 1024 - 1200 - 1250 - 2000 - 2048 - 2500 - 4096 - 5000 - 8192 - 10000

Supply Voltage and output circuit :
5V : 5V in / out
245V : 5-30V in 5V out
30V : 5-30V in / out

FNC F82 Series

Features

- **Special 80 mm design, through hollow shaft**
- **Robust mechanical and electrical construction**
- **Protection up to IP67**
- **Up to 8192 PPR max.**
- **<300 kHz frequency**

PPR Options :

1024 - 2000 - 2048 - 4000 - 4096 - 8000 - 8192

Technical data - electrical ratings

Voltage supply	4.75VDC to 30VDC 4.75VDC to 5.5VDC
Protection:	Output short circuit protection. Reverse polarity protection (except 5V version)
Consumption w/o load	≤60 mA (24 VDC)
Resolution (steps/turn)	1024...8192
Reference signal	Zero pulse, width 90° 180°, 360° optional
Optoelectronic life time	100.000 (min)
Output frequency	<300 kHz
Output signals	90° shifted A and B, Z + inverted
Output circuit	Linedriver/RS422 Push-pull short-circuit proof NPN Open Collector
Interference immunity	DIN EN 61000-6-2
Emitted interference	DIN EN 61000-6-4
Approval	CE

Technical data - mechanical design

Dimensions (flange)	ø80 mm
Shaft loading	≤140 N axial ≤240 N radial
Protection DIN EN 60529	IP54, IP65
Operating speed	≤10000 rpm
Starting torque	≤0.025 Nm (IP 67)
Materials	Housing: Stainless steel Flange: Stainless steel Shaft : Stainless steel
Shaft diameter:	38, 40, 42, 44 mm (other diameters on request)
Bearings lifetime:	$2x10^9$ rev. at 100% of full rated shaft load (minimum)
Operating temperature	-20...+85 °C
Storage temperature	-30 °C up to +90 °C
Weight approx.	300 g

Accessories

Connectors and cables
CRM1208 M12 8 poles female connector or see page 206

Mounting coupling
See page 204

Mounting accessories
KLM spring or see page 202-203

FNC F82 Series

Mechanical Dimensions

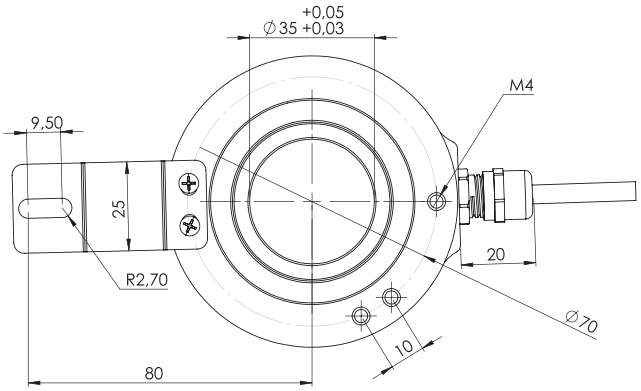

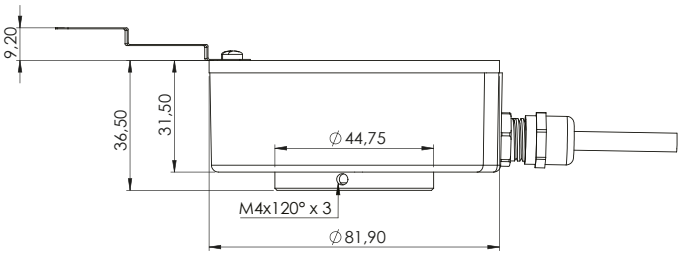

Pulse Diagram

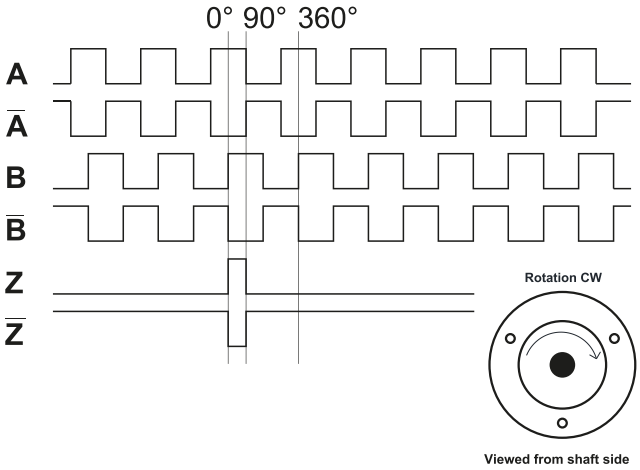

Cable Wiring

Function	Color	Renk	Explanation
+VB	Brown	Kahve	Supply Voltage
GND	White	Beyaz	Ground
A	Green	Yeşil	A Channel
A'	Red	Kırmızı	A Inverted Channel
B	Yellow	Sarı	B Channel
B'	Pink	Pembe	B Inverted Channel
Z	Gray	Gri	Z Channel
Z'	Blue	Mavi	Z Inverted Channel
Shield	Black	Siyah	Shield

Encoder Part Number

FNC | F82 | 44 | 6 | 30V | 1024 | – | R7

F82 Series

Shaft diameter : 38, 40, 42, 44
Other dimensions on request

Output Channels
1 : A
2 : AB
3 : ABZ
4 : AB+A' B'
6 : ABZ+A' B' Z'

Electrical Connections:

Cable
R7 : radial 7m, shield not connected (standart)

Connector:

R1204	R1607
R1205	R1614
R1208	R2312R
R1212	R2312L

PPR Options :
1024 - 2000 - 2048 - 4000 - 4096 - 8000 - 8192

Supply Voltage and output circuit :
5V : 5V in / out
245V : 5-30V in 5V out
30V : 5-30V in / out

FNC 100H Series

Features

- **Industry 100 mm design, through hollow shaft**
- **Robust mechanical and electrical construction**
- **Protection up to IP67**
- **Up to 10.000 PPR max.**
- **<300 kHz frequency**

PPR Options :

1024 - 2000 - 2048 - 2500 - 4000 - 4096 - 5000 - 8000 - 8192 - 10000

Technical data - electrical ratings

Voltage supply	4.75VDC to 30VDC 4.75VDC to 5.5VDC
Protection:	Output short circuit protection. Reverse polarity protection (except 5V version)
Consumption w/o load	≤60 mA (24 VDC)
Resolution (steps/turn)	1024...10.000
Reference signal	Zero pulse, width 90° 180°, 360° optional
Optoelectronic life time	100.000 (min)
Output frequency	<300 kHz
Output signals	90° shifted A and B, Z + inverted
Output circuit	Linedriver/RS422 Push-pull short-circuit proof NPN Open Collector
Interference immunity	DIN EN 61000-6-2
Emitted interference	DIN EN 61000-6-4
Approval	CE

Technical data - mechanical design

Dimensions (flange)	ø100 mm
Shaft loading	≤140 N axial ≤240 N radial
Protection DIN EN 60529	IP54, IP65
Operating speed	≤10.000 rpm
Starting torque	≤0.025 Nm (IP 67)
Materials	Housing: aluminium Flange: aluminium Shaft : stainless steel
Shaft diameter:	26, 28, 30, 32, 38 ,40 ,42 mm (other diameters on request)
Bearings lifetime:	$2x10^9$ rev. at 100% of full rated shaft load (minimum)
Operating temperature	-20...+85 °C
Storage temperature	-30 °C up to +90 °C
Weight approx.	700 g

Accessories

Connectors and cables
CRM1208 M12 8 poles female connector or see page 206

Mounting coupling
See page 204

Mounting accessories
YY ASTK spring or see page 202-203

Pulse Diagram

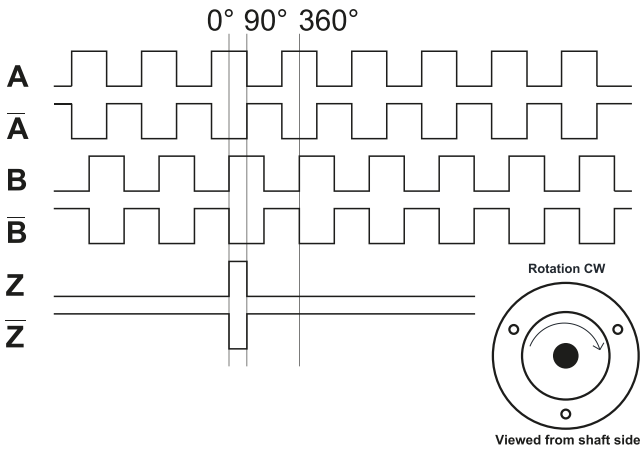

FNC 100H Series

Mechanical Dimensions

100H

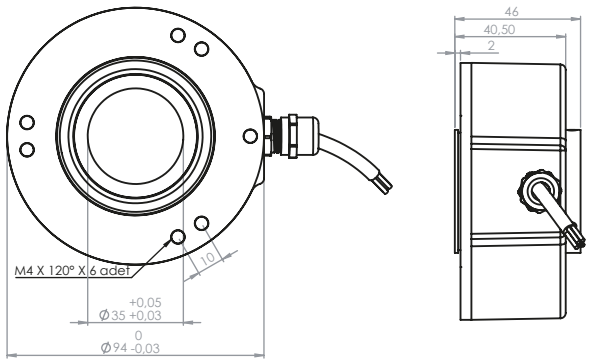

100HD

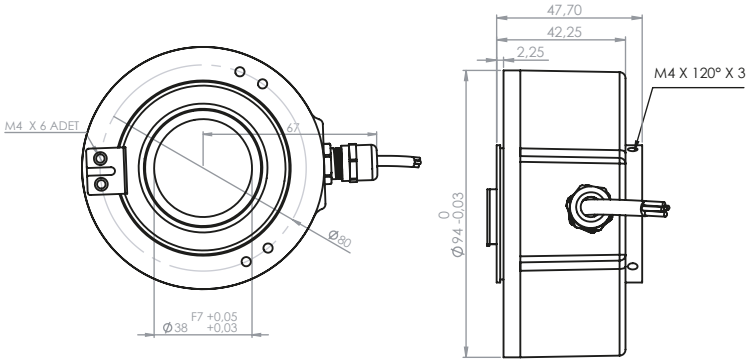

Connector Wiring

Connector Type	+Vcc	GND	A	A'	B	B'	Z	Z'	Shield
CRM1204	1	2	3		4				o.r.
CRM1205	1	2	3		4		5		o.r.
CRM1208	1	2	3	6	4	7	5	8	o.r.
CRM1212	1	2	3	6	4	7	5	8	o.r.
CRM1607	1	2	3		4		5		o.r.
CRM1614	Customer Specific								o.r.
CRM2312R	2-12	10-11	5	6	8	1	3	4	o.r.
CRM2312L	2-12	10-11	5	6	8	1	3	4	o.r.

For further information please see page 206

Cable Wiring

Function	Color	Renk	Explanation
+VB	Brown	Kahve	Supply Voltage
GND	White	Beyaz	Ground
A	Green	Yeşil	A Channel
A'	Red	Kırmızı	A Inverted Channel
B	Yellow	Sarı	B Channel
B'	Pink	Pembe	B Inverted Channel
Z	Gray	Gri	Z Channel
Z'	Blue	Mavi	Z Inverted Channel
Shield	Black	Siyah	Shield

Encoder Part Number

FNC | 100 | H | 38 | 6 | 30V | 1024 | — | R2

Housing:
100 : 100mm

Flange Type:
H : Through hollow shaft
HD : Through hollow shaft - thick version

Shaft diameter : 26, 28, 30, 32, 38, 40, 42, 44, 45
Other dimensions on request

Output Channels
1 : A
2 : AB
3 : ABZ
4 : AB+A' B'
6 : ABZ+A' B' Z'

Electrical Connections:

Cable
R2 : radial 2m, shield not connected (standart)

Connector:

R1204	R1607
R1205	R1614
R1208	R2312R
R1212	R2312L

PPR Options :

1024 - 2000 - 2048 - 2500 - 4000 - 4096 - 5000 - 8000 - 8192 - 10000

Supply Voltage and output circuit :

5V : 5V in / out
245V : 5-30V in 5V out
30V : 5-30V in / out

FENAC
www.fenac.com.tr

FENAC Automation Control

Programmable encoders

- **Flexible**
- **Compact**

Motion Control Products

Incremental encoders
Optical and Magnetic Programming Options

Programmable Resolution 1...65.536 pulses

FNC 50 Series Programmable

Features

- Industry 50 mm standart size,
- Clamping- servo- end hollow shaft flange versions
- Robust mechanical and electrical construction
- Protection up to IP67
- Up to 65.536 PPR max.
- ≤2 MHz frequency
- Programming via FNC PT - PC Programming tool
- FNC PT - PS easy programming software

PPR Options :

1 to 65.536 programmable PPR

Technical data - electrical ratings

Voltage supply	4.75VDC to 30VDC 4.75VDC to 5.5VDC
Protection	Output short circuit protection. Reverse polarity protection Over voltage protection (except 5V version)
Consumption w/o load	≤60 mA (5 VDC) ≤35 mA (12 VDC) ≤26 mA (24 VDC) ≤27 mA (30 VDC)
Resolution (steps/turn)	1...65.536
Reference signal	Programmable length, 90° 180°, 270 , 360°
Output frequency	≤2 MHz
Output signals	90° shifted A and B, Z + all channels can be set indepently inverted
Output circuit	Linedriver/RS422 Push-pull short-circuit proof
Interference immunity	DIN EN 61000-6-2
Emitted interference	DIN EN 61000-6-4
Approval	CE

Technical data - mechanical design

Dimensions (flange)	ø50 mm
Shaft loading	≤140 N axial ≤240 N radial
Protection DIN EN 60529	IP54, IP65
Operating speed	≤12000 rpm
Starting torque	≤0.025 Nm (IP 67)
Materials	Housing: Aluminium Flange: Aluminium Shaft : Stainless steel
Shaft diameter	6, 8, 10, 12 mm (other diameters on request)
Bearings lifetime	$2x10^9$ rev. at 100% of full rated shaft load (minimum)
Operating temperature	-20...+85 °C
Storage temperature	-30 °C up to +90 °C
Weight approx	250 g

Accessories

Connectors and cables
CRM2312 M23 12 poles female connector or see page 206

Mounting coupling
PF481010 plastic or see page 204

Mounting accessories
SF50B square flange or see page 202-203

FNC 50 Series Programmable

Mechanical Dimensions

50B

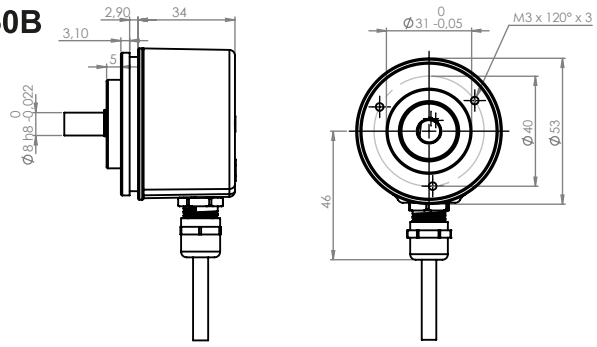

50S

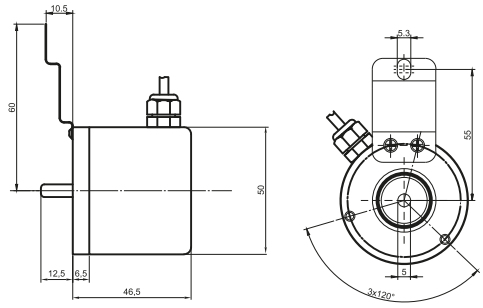

50H

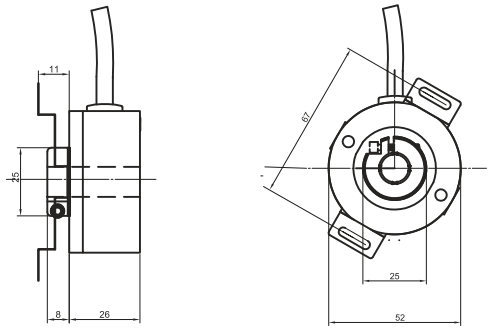

Pulse Diagram

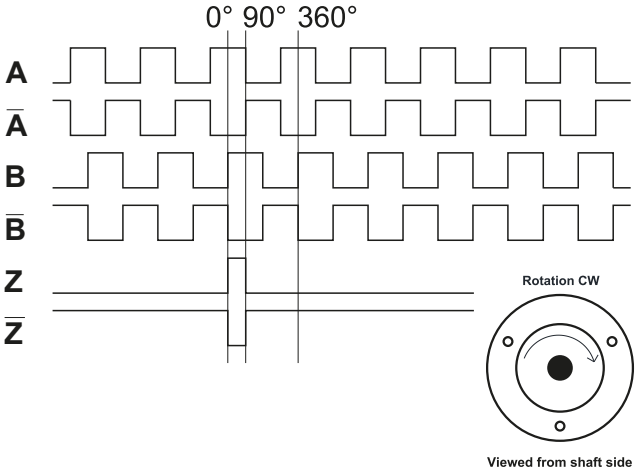

Cable Wiring

Function	Color	Renk	Explanation
+VB	Brown-Green	Kahve-Yeşil	Vcc
GND	White-Green	Beyaz-Yeşil	GND
A	Green	Yeşil	A
A'	Green-Black	Yeşil-Siyah	A Inverse
B	Yellow	Sarı	B
B'	Yellow-Black	Sarı- Siyah	B Inverse
Z	Gray	Gri	Z
Z'	Gray-Black	Gri-Siyah	Z Inverse
C	Blue	Mavi	Clock
D	Orange	Turuncu	Data
Shield	Black	Siyah	Shield

Encoder Part Number

FNCP | 50 | B | O | 10 | 6 | 30V | X | – | R2

Housing:
50 : 50mm

Flange Type:
S : Servo flange
B : Clamping flange
H : Through hollow shaft

O : Optical programmable **M :** Magnetic programmable

Shaft diameter : 4, 6, 8, 10, 12, 14
Other dimensions on request

Output Channels
3 : ABZ
4 : AB+A' B'
6 : ABZ+A' B' Z'

Electrical Connections:

Cable
R2 : radial 2m, shield not connected (standart)
A2 : axial 2m, shield not connected (standart)

Connector:

R1204	R1607	R1208	R2312R
R1205	R1614	R1212	R2312L

PPR Options :
1 to 65.536 Programmable

Supply Voltage and output circuit :
5V : 5V in / out
245V : 5-30V in 5V out
30V : 5-30V in / out

Incremental encoders
Optical and Magnetic Programming Options

Programmable Resolution 1...65.536 pulses

FNC 58 Series Programmable

Features

- **Industry 58 mm standart size,**
- **Clamping- servo- end hollow shaft flange versions**
- **Robust mechanical and electrical construction**
- **Protection up to IP67**
- **Up to 65.536 PPR max.**
- **≤2 MHz frequency**
- **Programming via FNC PT - PC Programming tool**
- **FNC PT - PS easy programming software**

PPR Options :

1 to 65.536 programmable PPR

Technical data - electrical ratings

Voltage supply	4.75VDC to 30VDC 4.75VDC to 5.5VDC
Protection	Output short circuit protection. Reverse polarity protection Over voltage protection (except 5V version)
Consumption w/o load	≤60 mA (5 VDC) ≤35 mA (12 VDC) ≤26 mA (24 VDC) ≤27 mA (30 VDC)
Resolution (steps/turn)	1...65.536
Reference signal	Programmable length, 90° 180°, 270 , 360°
Output frequency	≤2 MHz
Output signals	90° shifted A and B, Z + all channels can be set indepently inverted
Output circuit	Linedriver/RS422 Push-pull short-circuit proof
Interference immunity	DIN EN 61000-6-2
Emitted interference	DIN EN 61000-6-4
Approval	CE

Technical data - mechanical design

Dimensions (flange)	ø58 mm
Shaft loading	≤140 N axial ≤240 N radial
Protection DIN EN 60529	IP54, IP65
Operating speed	≤12000 rpm
Starting torque	≤0.025 Nm (IP 67)
Materials	Housing: Aluminium Flange: Aluminium Shaft : Stainless steel
Shaft diameter	6, 8, 10, 12 mm (other diameters on request)
Bearings lifetime	$2x10^9$ rev. at 100% of full rated shaft load (minimum)
Operating temperature	-20...+85 °C
Storage temperature	-30 °C up to +90 °C
Weight approx	250 g

Accessories

Connectors and cables
CRM2312 M23 12 poles female connector or see page 206

Mounting coupling
PF481010 plastic or see page 204

Mounting accessories
SF58B square flange or see page 202-203

FNC 58 Series Programmable

Mechanical Dimensions

58B

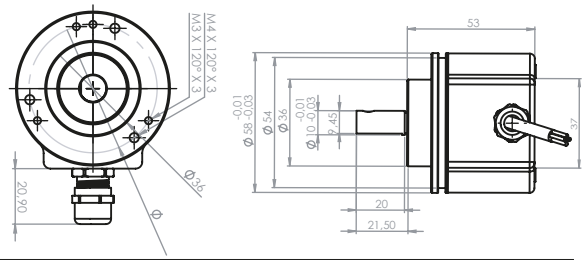

58S

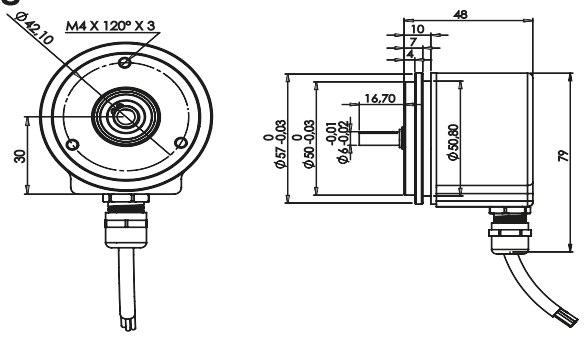

58E

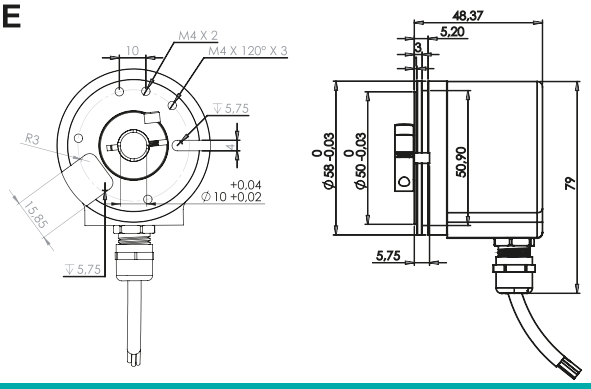

Pulse Diagram

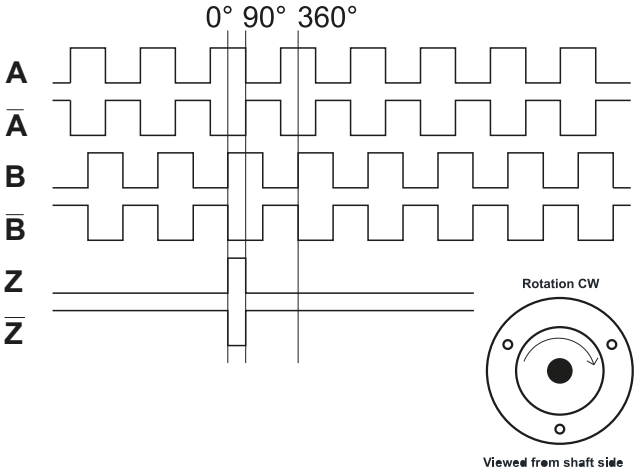

Cable Wiring

Function	Color	Renk	Explanation
+VB	Brown-Green	Kahve-Yeşil	Vcc
GND	White-Green	Beyaz-Yeşil	GND
A	Green	Yeşil	A
A'	Green-Black	Yeşil-Siyah	A Inverse
B	Yellow	Sarı	B
B'	Yellow-Black	Sarı- Siyah	B Inverse
Z	Gray	Gri	Z
Z'	Gray-Black	Gri-Siyah	Z Inverse
C	Blue	Mavi	Clock
D	Orange	Turuncu	Data
Shield	Black	Siyah	Shield

Encoder Part Number

FNCP | 58 | B | O | 10 | 6 | 30V | X | – | R2

Housing:
58 : 58mm

Flange Type:
S : Servo flange
B : Clamping flange
E : End hollow shaft
H : Hollow shaft

O : Optical programmable **M :** Magnetic programmable

Shaft diameter : 4, 6, 8, 10, 12, 14
Other dimensions on request

Output Channels
3 : ABZ
4 : AB+A' B'
6 : ABZ+A' B' Z'

Electrical Connections:

Cable
R2 : radial 2m, shield not connected (standart)
A2 : axial 2m, shield not connected (standart)

Connector:

R1204	R1607	R1208	R2312R
R1205	R1614	R1212	R2312L

PPR Options :
1 to 65.536 Programmable

Supply Voltage and output circuit :
5V : 5V in / out
245V : 5-30V in 5V out
30V : 5-30V in / out

FNCP 58 Series Programmable Encoders

Advantages of AnyPulse®
FNCP 58 Series Programmable encoders

- Free programming of PPR up to 65.536
- 5-30VDC voltage range TTL / HTL together
- Reference pulse setting
- Z Index pulse lenght 90, 180, 270, 360
- CW or CCW free direction selection
- Programming via user friendly FNC-PT software

Further Flexibilities

- Less product models, Less inventory cost
- Shorter downtime
- Fast and easy replacement and retrofit
- Easy order processing
- Immediate delivery
- Cost efficiency for even high PPR

FNCP 58B

FNCP 58S

FNCP 58E

Order Part Numbers

1) Part Number;
FNCP 58B 10630VX-R2

2) Part Number;
FNC PD-PC Programming Device

Programming Software

AnyPulse FNCP 58 series
Compact, Easy, Flexible

- Magnetic sensing technology (optic optional)
- High protection up to ıp67
- Speed up to 12000 rpm
- -40 °C to +100 °C temperature range
- Robust mechanics with DoubleLock system
- Best price-performance

ShaftLock

High Speed

Temperature

High IP

Shock / Vibration resistant

Magnetic field proof

FENAC Automation Control

Heavy duty encoders

- Heavy
- Reliable
- Robust

Motion Control Products

Incremental encoders up to IP69K

Resolution 1...65.536 pulses

FNC 58BSS Stainless Steel

Stainless Steel

Features

- **Industry 58 mm standard size, clamping flange**
- **Stainless Steel**
- **Robust mechanical and electrical construction**
- **Protection up to IP69K**
- **Up to 65.536 PPR max.**
- **<300 kHz frequency**
- **Optical or magnetic system**

PPR Options :

1 to 65.536 PPR Any PPR option

Technical data - electrical ratings

Voltage supply	4.75VDC to 30VDC 4.75VDC to 5.5VDC
Protection	Output short circuit protection. Reverse polarity protection (except 5V version)
Consumption w/o load	≤60 mA (24 VDC)
Resolution (steps/turn)	1...65.536
Reference signal	Zero pulse, width 90° 180°, 360° optional
Optoelectronic life time	100.000 (min)
Output frequency	>200 kHz
Output signals	90° shifted A and B, Z + inverted
Output circuit	Linedriver/RS422 Push-pull short-circuit proof
Interference immunity	DIN EN 61000-6-2
Emitted interference	DIN EN 61000-6-4
Approval	CE

Technical data - mechanical design

Dimensions (flange)	ø58 mm
Shaft loading	≤140 N axial ≤240 N radial
Protection DIN EN 60529	IP54, IP65
Operating speed	≤10000 rpm
Starting torque	≤0.025 Nm (IP 67)
Materials	Housing: Stainless steel Flange: Stainless steel Shaft : Stainless steel
Shaft diameter:	6, 8, 10, 12 mm (other diameters on request)
Bearings lifetime:	$2x10^9$ rev. at 100% of full rated shaft load (minimum)
Operating temperature	-20...+85 °C
Storage temperature	-30 °C up to +90 °C
Weight approx.	500 g

Accessories

Connectors and cables
CRM2312 M23 12 poles female connector or see page 206

Mounting coupling
PF481010 plastic or see page 204

Mounting accessories
SF58B square flange or see page 202-203

FNC 58BSS Stainless Steel

Mechanical Dimensions

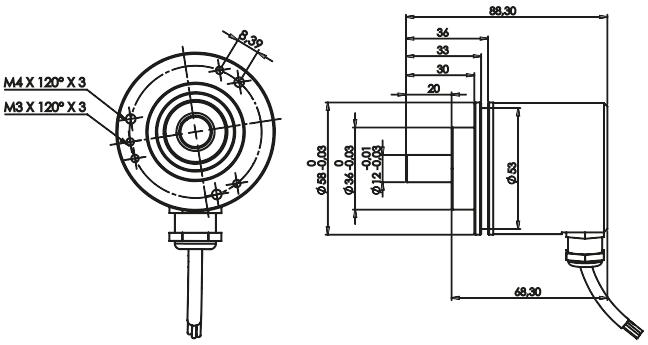

Pulse Diagram

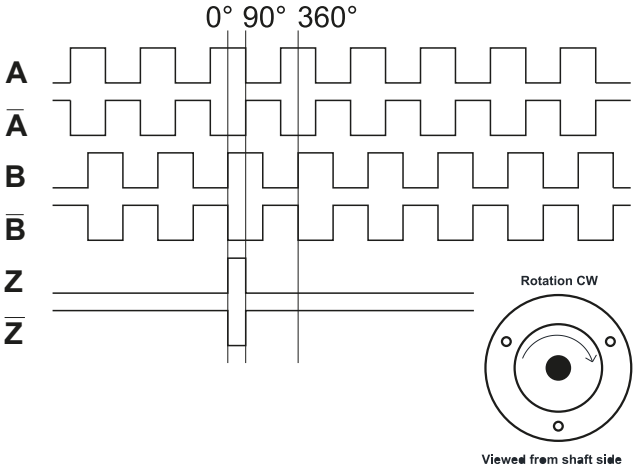

Connector Wiring

Connector Type	+Vcc	GND	A	A'	B	B'	Z	Z'	Shield
CRM1204	1	2	3		4				o.r.
CRM1205	1	2	3		4		5		o.r.
CRM1208	1	2	3	6	4	7	5	8	o.r.
CRM1212	1	2	3	6	4	7	5	8	o.r.
CRM1607	1	2	3		4		5		o.r.
CRM1614	Customer Specific								o.r.
CRM2312R	2-12	10-11	5	6	8	1	3	4	o.r.
CRM2312L	2-12	10-11	5	6	8	1	3	4	o.r.

For further information please see page 206

Cable Wiring

Function	Color	Renk	Explanation
+VB	Brown	Kahve	Supply Voltage
GND	White	Beyaz	Ground
A	Green	Yeşil	A Channel
A'	Red	Kırmızı	A Inverted Channel
B	Yellow	Sarı	B Channel
B'	Pink	Pembe	B Inverted Channel
Z	Gray	Gri	Z Channel
Z'	Blue	Mavi	Z Inverted Channel
Shield	Black	Siyah	Shield

Encoder Part Number

FNC | 58 | B | SS | 8 | 6 | 30V | 1024 | – | R2

Housing:
58 : 58mm

Flange Type:
B : Clamping flange
S : Servo flange
H : Through hollow shaft
E : End hollow shaft

SS : Stainless Steel

Shaft diameter : 8, 10, 12, 14
Other dimensions on request

Output Channels
1 : A
2 : AB
3 : ABZ
4 : AB+A' B'
6 : ABZ+A' B' Z'

Electrical Connections:

Cable
R2 : radial 2m, shield not connected (standart)
A2 : axial 2m, shield not connected (standart)

Connector:
R1204 R1607
R1205 R1614
R1208 R2312R
R1212 R2312L

PPR Options :
1 to 128 - 25 - 50 - 100 - 200 - 250 - 300 - 360 - 400 - 500 - 512 - 600 - 720 - 800 - 900 - 1000 - 1024 - 1250 - 1440 - 2000 - 2048 - 2500 - 3000 - 3600 - 4000 - 4096 - 5000 - 6000 - 8192 - 10000 - 12500 - 16384 - 20000 - 25000

Supply Voltage and output circuit :
5V : 5V in / out
245V : 5-30V in 5V out
30V : 5-30V in / out

Heavy Duty Series

End hollow shaft ø12...16 mm, cone shaft ø17 mm
1000...10000 pulses per revolution

FHD H100

with redundant option

Features

- **Robust, compact housing**
- **Two bearings with large distance**
- **High shaft load up to 400 N**
- **Highest operating speed 10000 rpm**
- **Terminal box, M23 connector, Cable options**

Technical data - electrical ratings

Voltage supply	9...30 VDC 5 VDC ±5 %
Consumption w/o load	≤100 mA
Pulses per revolution	1000...10000
Phase shift	90° ±15°
Scan ratio	45...55 %
Reference signal	Zero pulse, width 90°
Sensing method	Optical
Output frequency	≤200 kHz
Output signals	A, B, Z + inverted
Output stages	push-pull TTL/RS422
Shaft insulation	2.8 kV
Transmission length	≤400m at 100kHz
Interference immunity	EN 61000-6-2
Emitted interference	EN 61000-6-3
Approvals	CE

Technical data - mechanical design

Size (flange)	ø100mm
Shaft type	ø12...16 mm (blind hollow shaft) ø17 mm (cone shaft 1:10)
Shaft loading	≤300 N axial ≤400 N radial
Motor shaft tolerance	0.2 mm radial
Protection DIN EN 60529	IP 66
Operating speed	≤10000 rpm (mechanical)
Operating torque	≤6 Ncm
Rotor moment of inertia	160 gcm²
Materials	Housing: coated aluminium Shaft: stainless steel
Operating temperature	-40...+100 °C -40...+90 °C
Connection	Terminal box Flange connector M23, 12-pin Cable 1 m
Weight approx.	1.1 kg

Output signals

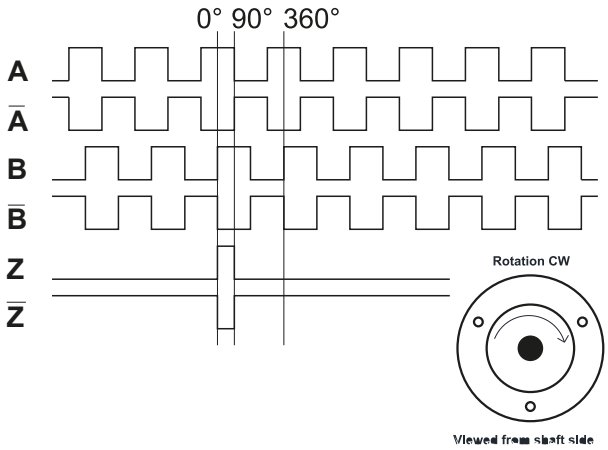

Terminal assignment

FHD H100
Connecting terminal terminal box

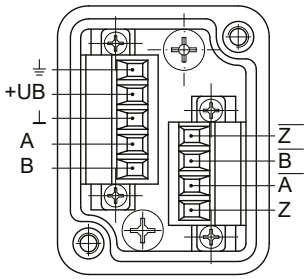

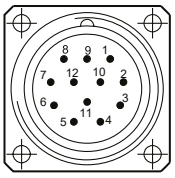

FHD H100
Flange connector
M23, 12-pin, male CW

Pin	Assignment
1	$\overline{B}$
2	nc
3	Z
4	$\overline{Z}$
5	A
6	$\overline{A}$
7	nc
8	B
9, 10	nc
11	GND
12	+UB

Heavy Duty Series

End hollow shaft ø12...16 mm, cone shaft ø17 mm
1000...10000 pulses per revolution

FHD H100

Mechanical Dimensions

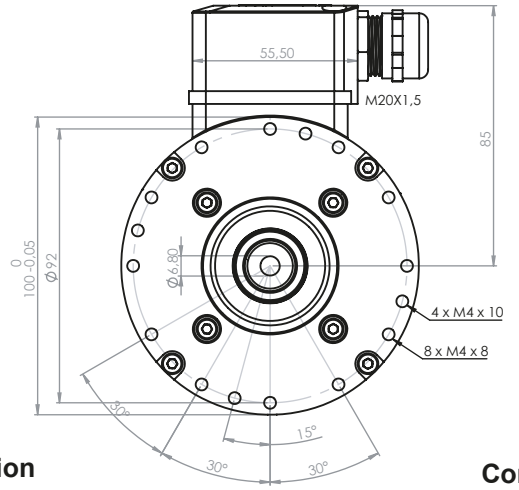

End Hollow Shaft Version

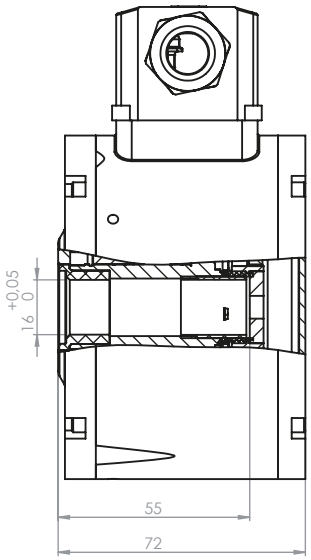

Conic Shaft Version

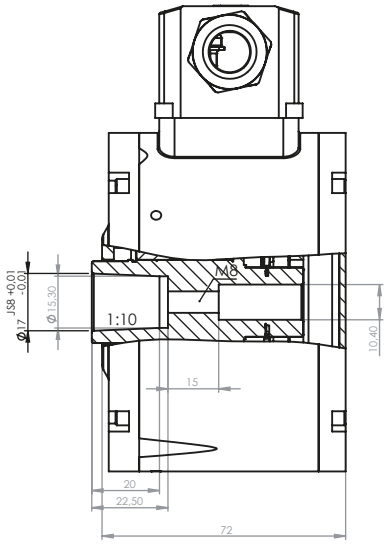

Encoder Part Number

FHD	H	100	16	6	30V	1024	–	T

H : Hollow shaft
RH : Hollow shaft redundant

Flange : 100mm

Shaft Diamater
10 : Blind hollow shaft Ø10mm
12 : Blind hollow shaft Ø12mm
16 : Blind hollow shaft Ø16mm
17 : C17 conic shaft Ø17mm

Output Channels
1 : A
2 : AB
3 : ABZ
4 : AB+A' B'
6 : ABZ+A' B' Z'

Electrical Connections:
T : Terminal box
M : M23 12L pin connector
TC : Terminal box with cable
R : Redundant Dsub Connection

PPR Options :
1000 - 1024 - 2000 - 2048 - 2500 - 4096 - 5000 - 8092 - 10000

Supply Voltage and output circuit :
5V : 5V in / out
245V : 5-30V in 5V out
30V : 5-30V in / out

Heavy Duty Series

Solid shaft with EURO flange B10
1000...10000 pulses per revolution

FHD S115

with redundant option

Features

- **Robust, compact housing**
- **Two bearings with large distance**
- **High shaft load up to 300 N**
- **Highest operating speed 10000 rpm**
- **Terminal box, M23 connector, Cable options**

Technical data - electrical ratings

Voltage supply	9...30 VDC 5 VDC ±5 %
Consumption w/o load	≤100 mA
Pulses per revolution	1000...10000
Phase shift	90° ±15°
Scan ratio	45...55 %
Reference signal	Zero pulse, width 90°
Sensing method	Optical
Output frequency	≤200 kHz
Output signals	A, B, Z + inverted
Output stages	push-pull TTL/RS422
Shaft insulation	By plastic coupling
Transmission length	≤400m at 100kHz
Interference immunity	EN 61000-6-2
Emitted interference	EN 61000-6-3
Approvals	CE

Technical data - mechanical design

Size (flange)	B10 flange//115 mm
Shaft type	ø11mm solid shaft
Shaft loading	≤240 N axial ≤300 N radial
Protection DIN EN 60529	IP 66
Operating speed	≤10000 rpm (mechanical)
Operating torque	≤4 Ncm
Rotor moment of inertia	160 gcm²
Materials	Housing: die-cast aluminium Shaft: stainless steel
Operating temperature	-40...+100 °C -40...+90 °C
Connection	Terminal box Flange connector M23, 12-pin Cable 1 m
Weight approx.	1.2 kg

Output signals

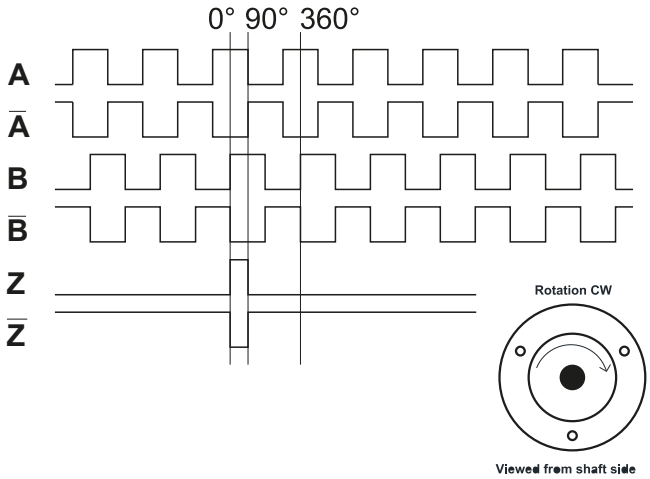

Heavy Duty Series

Solid shaft with EURO flange B10
1000...10000 pulses per revolution

FHD S115

Mechanical Dimensions

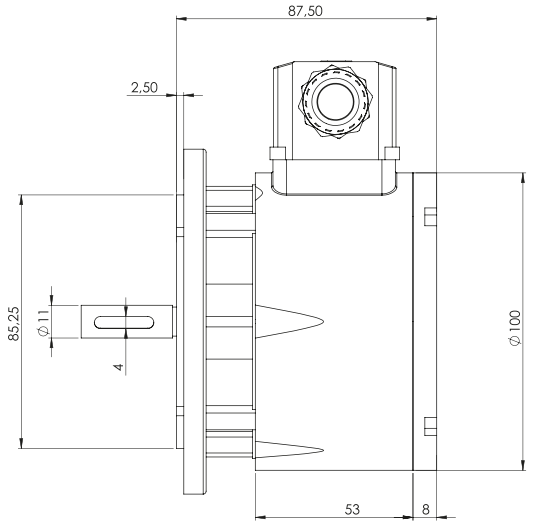

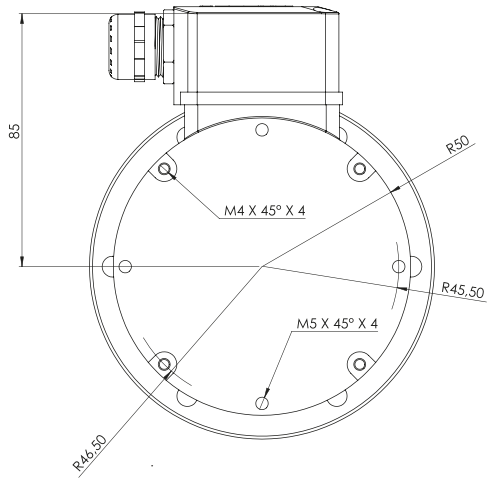

Terminal assignment

FHD S115
Connecting terminal terminal box

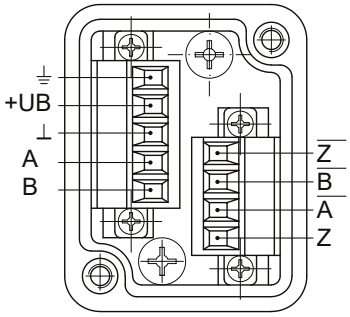

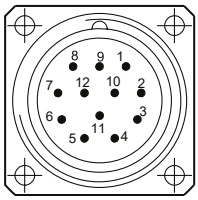

FHD S115
Flange connector
M23, 12-pin

Pin	Assignment
1	$\overline{B}$
2	nc
3	Z
4	$\overline{Z}$
5	A
6	$\overline{A}$
7	nc
8	B
9, 10	nc
11	GND
12	+UB

Encoder Part Number

FHD | **S** | **115** | **11** | **6** | **30V** | **1024** | **–** | **T**

S : Shaft
RS : Shaft redundant

Flange : 115mm

Shaft Diamater
11 : 11mm shaft with keyway

Output Channels
1 : A
2 : AB
3 : ABZ
4 : AB+A' B'
6 : ABZ+A' B' Z'

Electrical Connections:
T : Terminal box
M : M23 12L pin connector
TC : Terminal box with cable
R : Redundant Dsub Connection

PPR Options :
1000 - 1024 - 2000 - 2048 - 2500 - 4096 - 5000 - 8092 - 10000

Supply Voltage and output circuit :
5V : 5V in / out
245V : 5-30V in 5V out
30V : 5-30V in / out

Redundant Connections

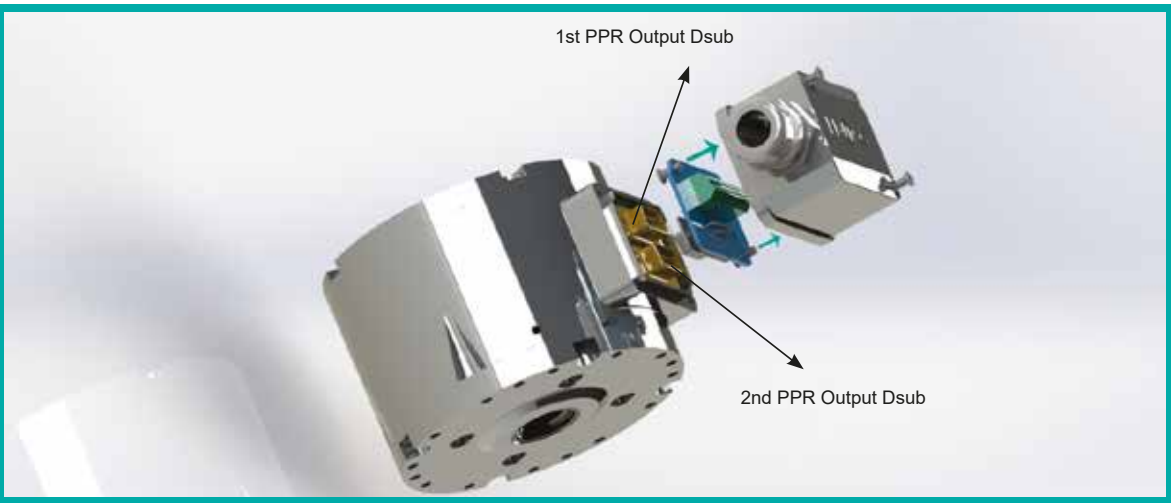

1st PPR output and 2nd PPR output are totally redundant. Optical and electronic side are independent.

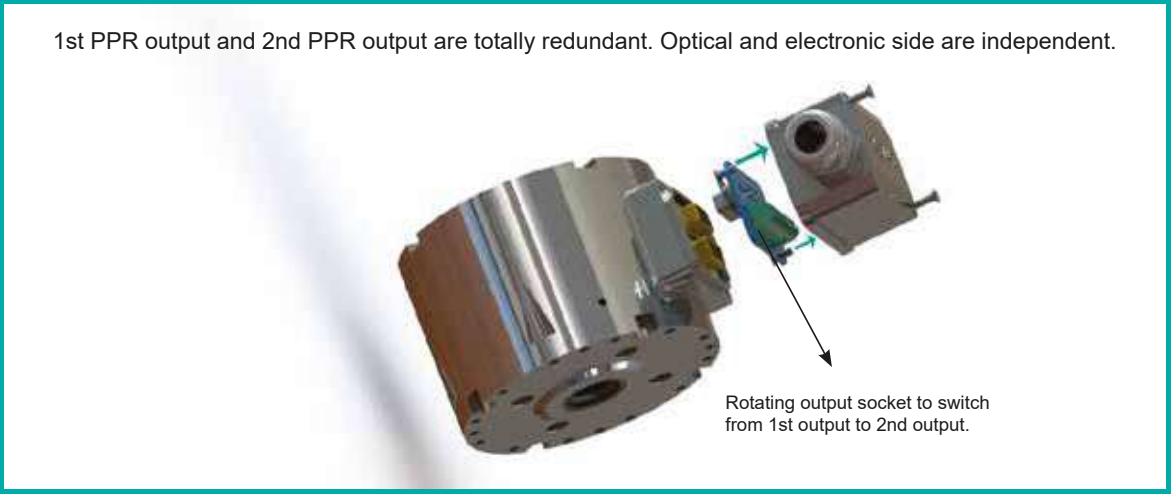

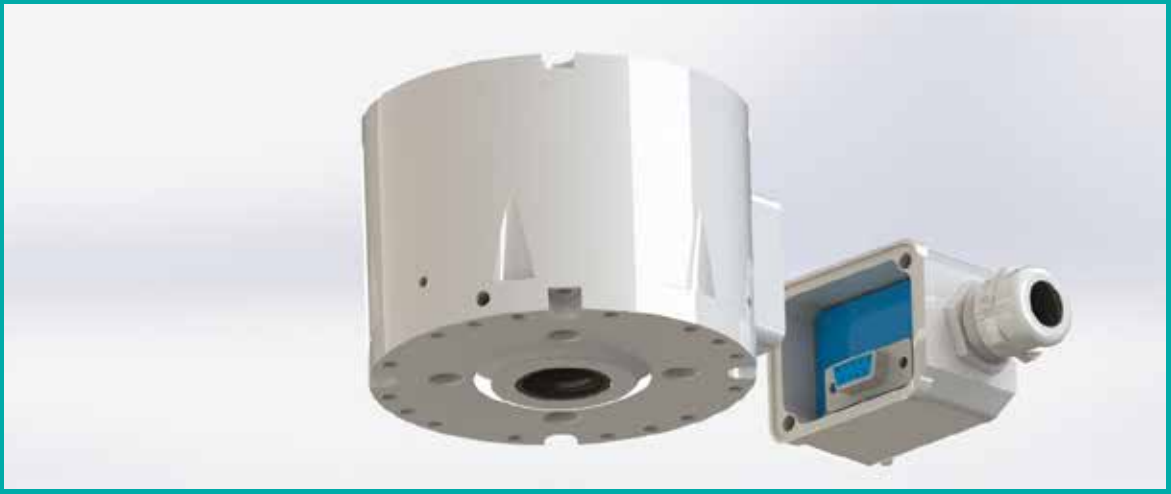

Redundant Output Connector

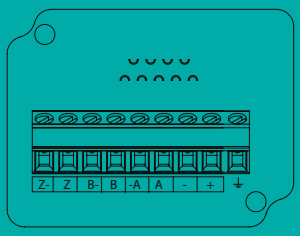

FHD H100 Mounting

1	M20x1.5 Nipel (Kablo Çıkışı)	1	M20x1.5 Nipple (Cable Out)
2	M20x1.5 Nipel Somunu	2	M20x1.5 Nipple Loaf
3	Topraklama M3 Bolt	3	Earthing M3 Bolt
4	Tork Kolu Aksesuar Olarak Mevcut	4	Torque Arm Available As Accessory
5	Genişlik 10 mm	5	Width 10 mm

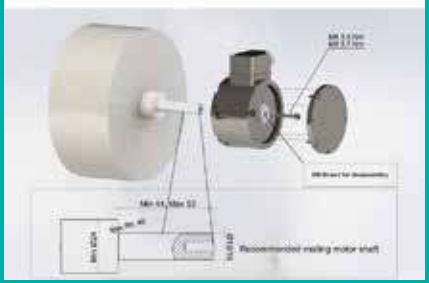

FHD S115 Mounting

1	Gövde	1	Housing
2	Flanş	2	Flange
3	Montaj Kanalı	3	Solid shaft with key
4	Kablo Terminal Kapağı	4	Terminal box cover
5	Nipel (Rekor)	5	Screw with torx and slotted drive
6	Bağlantı Klemensi	6	Connecting terminal

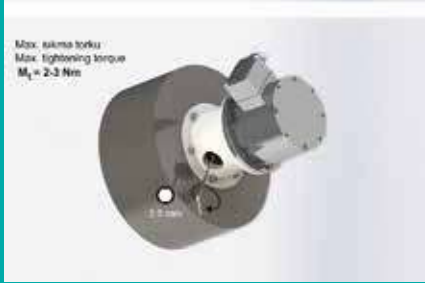

FENAC
Gri (GREY)
C
Pembe (PINK)
C-
Sarı (YELLOW)
D
Mor (PURPLE)
D-
Kahve / Yeşil (BROWN-GREEN)
Beyaz / Yeşil (WHITE-GREEN)
Yeşil / Siyah (GREEN-BLACK)
Sarı / Siyah (YELLOW-BLACK)
Mavi / Siyah (BLUE-BLACK)
Kırmızı / Siyah (RED-BLACK)
+VDC
GND
A
A-
B
B-
Shield connected to housing
www.fenac.com.tr
TURKISH MADE
DS15
ABSOLUTE ENCODERS

FENAC Automation Control

Absolute encoders

- Flexibilitiy
- Variety

Motion Control Products

Absolute encoders - SSI / BiSS

Shaft with clamping or synchro flange
Single turn 9...19 bit,

FNC AS 27 Series

Features

- **Encoder single - or multiturn /SSI - BISS**
- **Magnetic or optical sensing**
- **Single turn resolution up to 21 bit**
- **Synchro flange**
- **System monitoring with error/warning messaging**
- **Optional Prereset and direction input**
- **Small form factor with sense position data**

Technical data - electrical ratings

Voltage supply	8VDC to 30VDC
Protection:	Output short circuit protection. Reverse polarity protection (except 5V version)
Consumption w/o load	≤80 mA (24 VDC)
Interface	SSI or BiSS
Resolution (steps/turn)	Magnetic: 14 bit Optic: 21 bit
Absolute accuracy	Magnetic: ±0,1° Optic: ±0,01°
Optoelectronic life time	100.000 (min)
Code	Gray or binary
Inputs	SSI differential clock Direction Electronic zero setting
Output frequency	up to 2MHz (SSI) up to 10MHz (BiSS)
Output circuit	SSI data linedriver RS485
Interference immunity	DIN EN 61000-6-2
Emitted interference	DIN EN 61000-6-4
Approval	CE

Technical data - mechanical design

Dimensions (flange)	Ø 27 mm
Shaft loading	≤20 N axial ≤40 N radial
Protection DIN EN 60529	IP 67
Operating speed	≤10000 rpm
Starting torque	≤0.001 Nm (IP 67)
Materials	Housing, Flange : Aluminium Shaft : Stainless steel
Shaft diameter:	6, 8, 10 mm (other diameters on request)
Bearings lifetime:	$2x10^9$ rev. at 100% of full rated shaft load (minimum)
Operating temperature	-40...+90°C -40 °F ... +180 °F
Weight approx.	250 g

Pulse Diagram

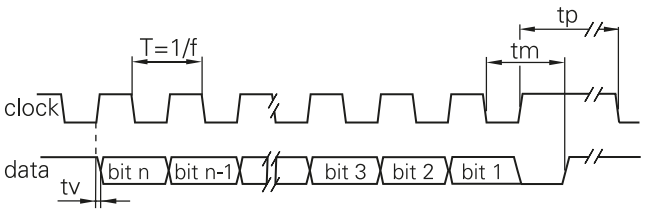

Clock frequency, f	100... 4000 kHz for SSI up to 10MHz for BISS
Code	Binary or gray
Status and parity bit	On request
Monoflop time tm	> 5µs

FNC AS 27 Series

Mechanical Dimensions

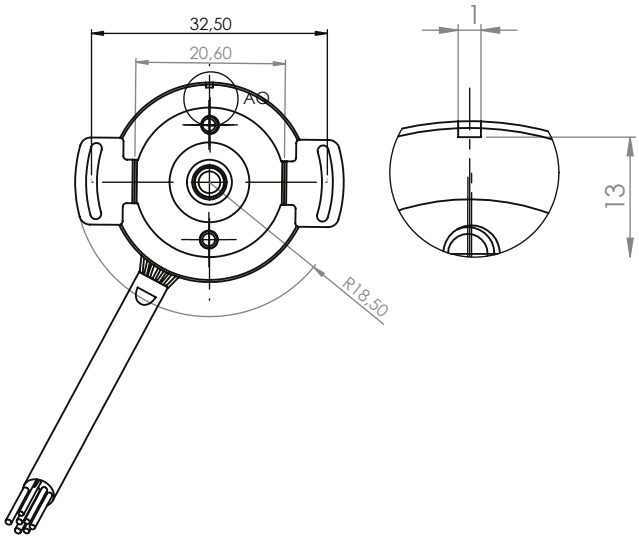

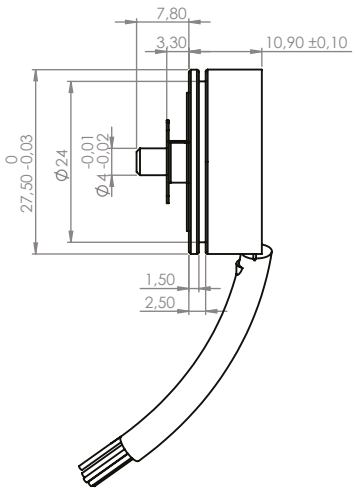

Terminal significance

+Vs	Encoder supply voltage.
0 V	Encoder ground connection relating to +Vs
Data+	Positive data output.
Data-	Negative data output.
Clock+	Positive SSI clock input.
Clock-	Negative SSI clock input.
Direction	UP/DOWN counting direction input. This input is standart on High. UP/DOWN means ascending output data with clockwise shaft rotation when looking at flange.
Preset	Parameter for setting the encoder to a requested position value assigned to a defined shaft position of the system.The offset of encoder zero point and mechanical zero point is stored in the encoder.
Note	If needed, Include termination resistor R=120 Ohm between Data+ and Data- on control side.

Encoder Part Number

FNC A S O 27 S 10 S12 30V B – R4

Absolute

S: SSI **B:** BISS

O: Optical **M**: Magnetic

Housing : 27: 27mm

Flange Type:
S : Servo flange **B :** Clamping flange

Shaft diameter : 6, 8, 10
Other dimensions on request

S : Single Turn
up to 21 bit

Electrical Connections:

Cable
R4 : radial 4m **R1C4 :** connector after 1m Cable

Connector:
CRM1212 CRM2312L CRM2312R

B: Binary **G:** Gray

Supply Voltage:
30V : 8-30V input

Absolute encoders - SSI / BiSS

Shaft with clamping or synchro flange
Single turn 9...21 bit,
Multi turn 0...32 bit

FNC AS 36B & 36S Series

Features

- **Encoder single - or multiturn /SSI - BISS**
- **Magnetic or optical sensing**
- **Single turn resolution up to 21 bit**
- **Multi turn 0 ...32 bit**
- **Clamping flange or synchro flange**
- **Permanent check of code continuity**
- **Extreme resistance to shock and vibration**
- **Encoder with electronic reset**

Technical data - electrical ratings

Voltage supply	8VDC to 30VDC
Protection:	Output short circuit protection. Reverse polarity protection (except 5V version)
Consumption w/o load	≤80 mA (24 VDC)
Interface	SSI or BiSS
Resolution (steps/turn)	Magnetic: 14 bit Optic: 21 bit
Absolute accuracy	Magnetic: ±0,1° Optic: ±0,01°
Optoelectronic life time	100.000 (min)
Code	Gray or binary
Inputs	SSI differential clock Direction Electronic zero setting
Output frequency	up to 2MHz (SSI) up to 10MHz (BiSS)
Output circuit	SSI data linedriver RS485
Interference immunity	DIN EN 61000-6-2
Emitted interference	DIN EN 61000-6-4
Approval	CE

Technical data - mechanical design

Dimensions (flange)	ø40 mm
Shaft loading	≤20 N axial ≤40 N radial
Protection DIN EN 60529	IP 67
Operating speed	≤10000 rpm
Starting torque	≤0.001 Nm (IP 67)
Materials	Housing, Flange : Aluminium Shaft : Stainless steel
Shaft diameter:	6, 8, 10 mm (other diameters on request)
Bearings lifetime:	$2x10^9$ rev. at 100% of full rated shaft load (minimum)
Operating temperature	-40...+90°C -40 °F ... +180 °F
Weight approx.	250 g

Pulse Diagram

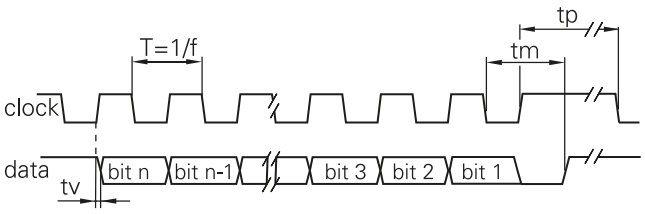

Clock frequency, f	50...2000 kHz for SSI up to 10MHz for BISS
Code	Binary or gray
Status and parity bit	On request
Monoflop time tm	>15µs
Clock time out	Programmable at factory

FNC AS 36B & 36S Series

Mechanical Dimensions

36B

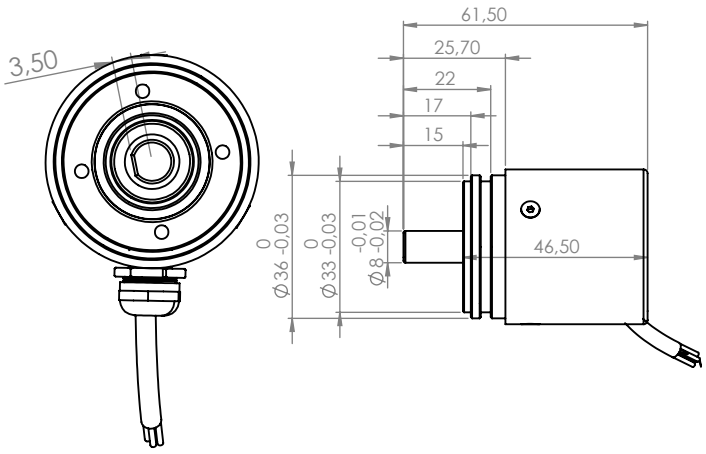

36S

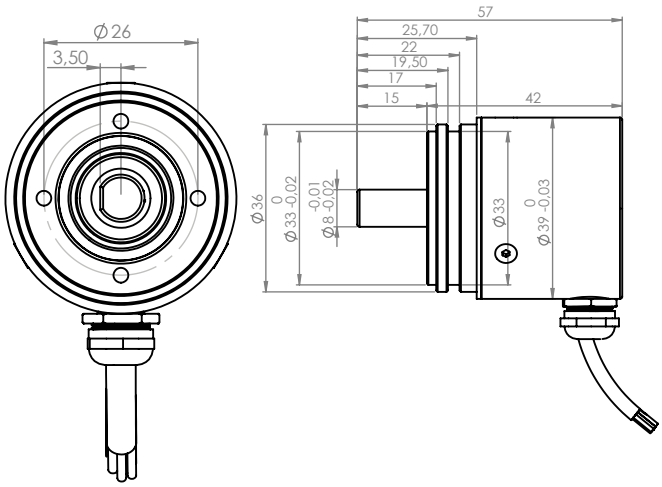

Terminal significance

+Vs	Encoder supply voltage.
0 V	Encoder ground connection relating to +Vs.
Data+	Positive data output.
Data-	Negative data output.
Clock+	Positive SSI clock input.
Clock-	Negative SSI clock input.
Direction	UP/DOWN counting direction input. This input is standart on High. UP/DOWN means ascending output data with clock-wise shaft rotation when looking at flange.
Preset	Parameter for setting the encoder to a requested position value assigned to a defined shaft position of the system.The offset of encoder zero point and mechanical zero point is stored in the encoder.
Note	If needed, Include termination resistor R=120 Ohm between Data+ and Data- on control side.

Connector	Core colour	Signals	Description
Pin 1	blue	Clock+	Clock signal
Pin 2	blue-black	Clock-	Clock signal
Pin 3	orange	Data+	Data signal
Pin 4	orange-black	Data-	Data signal
Pin 5	gray	Zero	Zero setting input
Pin 6,7,8,9	–	n.c.	–
Pin 10	gray-black	up/down	direction input
Pin 11	white	0 V	GND
Pin 12	brown	+Vs	Supply voltage
Screen: not connected to housing			
Cable data: 4 x 2 x 0.14 mm²			

Encoder Part Number

FNC A S O 36 S 10 S12 M12 30V B – R4

Absolute

S: SSI **B:** BISS

O: Optical **M**: Magnetic

Housing : 36: 36mm

Flange Type:
S : Servo flange **B :** Clamping flange

Shaft diameter : 6, 8, 10
Other dimensions on request

S : Single Turn
up to 21 bit

Electrical Connections:
Cable
R4 : radial 4m **R1C4 :** connector after 1m Cable
Connector:
R1214 R2312L R2312R

B: Binary **G:** Gray

Supply Voltage:
30V : 8-30V input

Multi turn options : 0, 4, 8, 12, 16, 18, 24, 32

Absolute encoders - SSI / BiSS

Shaft with clamping or synchro flange
Single turn 9... 21 bit,
Multi turn 0...32 bit

FNC AS 50B Series

Features

- **Encoder single - or multiturn /SSI - BISS**
- **Magnetic or optical sensing**
- **Single turn resolution up to 21 bit**
- **Multi turn 0...16 bit**
- **Clamping flange or synchro flange**
- **Permanent check of code continuity**
- **Extreme resistance to shock and vibration**
- **Encoder with electronic reset**

Technical data - electrical ratings

Voltage supply	8VDC to 30VDC
Protection:	Output short circuit protection. Reverse polarity protection (except 5V version)
Consumption w/o load	≤80 mA (24 VDC)
Interface	SSI or BiSS
Resolution (steps/turn)	Magnetic: 14 bit Optic: 21 bit
Absolute accuracy	Magnetic: ±0,1° Optic: ±0,01°
Optoelectronic life time	100.000 (min)
Code	Gray or binary
Inputs	SSI differential clock Direction Electronic zero setting
Output frequency	up to 2MHz (SSI) up to 10MHz (BiSS)
Output circuit	SSI data linedriver RS485
Interference immunity	DIN EN 61000-6-2
Emitted interference	DIN EN 61000-6-4
Approval	CE

Technical data - mechanical design

Dimensions (flange)	50 mm
Shaft loading	≤20 N axial ≤40 N radial
Protection DIN EN 60529	IP 67
Operating speed	≤10000 rpm
Starting torque	≤0.001 Nm (IP 67)
Materials	Housing, Flange : Aluminium Shaft : Stainless steel
Shaft diameter:	6, 8, 10 mm (other diameters on request)
Bearings lifetime:	$2x10^9$ rev. at 100% of full rated shaft load (minimum)
Operating temperature	-40...+90°C -40 °F ... +180 °F
Weight approx.	350 g

Pulse Diagram

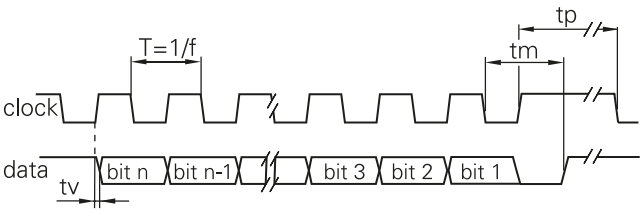

Clock frequency, f	50...2000 kHz for SSI up to 10MHz for BISS
Code	Binary or gray
Status and parity bit	On request
Monoflop time tm	>15µs
Clock time out	Programmable at factory

FNC AS 50B Series

Mechanical Dimensions

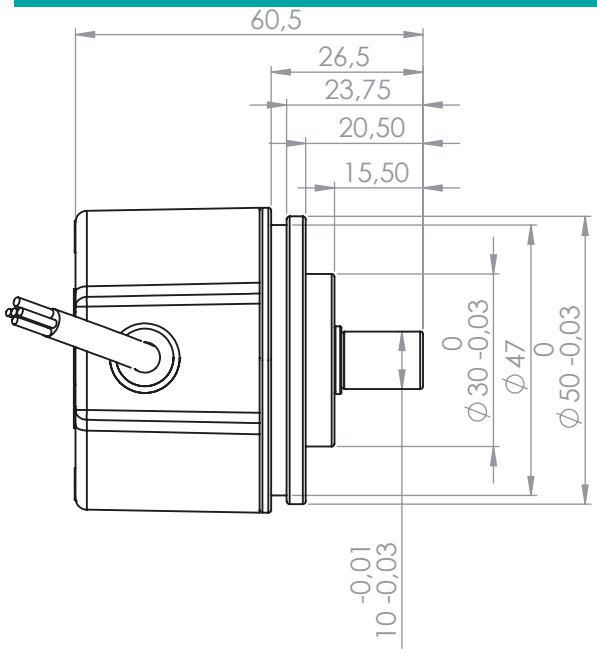

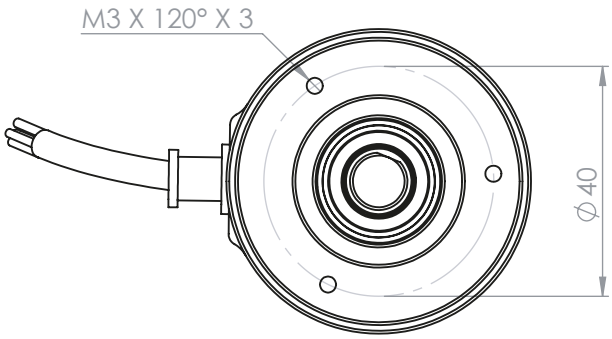

Terminal significance

+Vs	Encoder supply voltage.
0 V	Encoder ground connection relating to +Vs.
Data+	Positive data output.
Data-	Negative data output.
Clock+	Positive SSI clock input.
Clock-	Negative SSI clock input.
Direction	UP/DOWN counting direction input. This input is standart on High. UP/DOWN means ascending output data with clockwise shaft rotation when looking at flange.
Preset	Parameter for setting the encoder to a requested position value assigned to a defined shaft position of the system.The offset of encoder zero point and mechanical zero point is stored in the encoder.
Note	If needed, Include termination resistor R=120 Ohm between Data+ and Data- on control side.

Connector	Core colour	Signals	Description
Pin 1	blue	Clock+	Clock signal
Pin 2	blue-black	Clock-	Clock signal
Pin 3	orange	Data+	Data signal
Pin 4	orange-black	Data-	Data signal
Pin 5	gray	Zero	Zero setting input
Pin 6,7,8,9	–	n.c.	–
Pin 10	gray-black	up/down	direction input
Pin 11	white	0 V	GND
Pin 12	brown	+Vs	Supply voltage
Screen: not connected to housing			
Cable data: 4 x 2 x 0.14 mm^2			

Encoder Part Number

FNC | **A** | **S** | **O** | **50** | **B** | **10** | **S12** | **M12** | **30V** | **B** | **–** | **R4**

Absolute

S: SSI **B:** BISS

O: Optical **M**: Magnetic

Housing : 50: 50mm

Flange Type:
S : Servo flange **B :** Clamping flange

Shaft diameter : 6, 8, 10
Other dimensions on request

S : Single Turn
up to 21 bit

Electrical Connections:
Cable
R4 : radial 4m **R1C4 :** connector after 1m Cable
Connector:
CRM1212 CRM2312L CRM2312R

B: Binary **G:** Gray

Supply Voltage:
30V : 8-30V input

Multi turn options : 0, 4, 8, 12, 16, 18, 24, 32

Absolute encoders - SSI / BiSS

Shaft with clamping or synchro flange
Single turn 9... 21 bit,
Multi turn 0...32 bit

FNC AS 458B Series

Features

- **Encoder single - or multiturn /SSI - BISS**
- **Magnetic or optical sensing**
- **Single turn resolution up to 21 bit**
- **Multi turn 0 ...32 bit**
- **Clamping flange or synchro flange**
- **Permanent check of code continuity**
- **Extreme resistance to shock and vibration**
- **Encoder with electronic reset**

Technical data - electrical ratings

Voltage supply	8VDC to 30VDC
Protection:	Output short circuit protection. Reverse polarity protection (except 5V version)
Consumption w/o load	≤80 mA (24 VDC)
Interface	SSI or BiSS
Resolution (steps/turn)	Magnetic: 14 bit Optic: 21 bit
Absolute accuracy	Magnetic: ±0,1° Optic: ±0,01°
Optoelectronic life time	100.000 (min)
Code	Gray or binary
Inputs	SSI differential clock Direction Electronic zero setting
Output frequency	up to 2MHz (SSI) up to 10MHz (BiSS)
Output circuit	SSI data linedriver RS485
Interference immunity	DIN EN 61000-6-2
Emitted interference	DIN EN 61000-6-4
Approval	CE

Technical data - mechanical design

Dimensions (flange)	ø58 mm
Shaft loading	≤20 N axial ≤40 N radial
Protection DIN EN 60529	IP 67
Operating speed	≤10000 rpm
Starting torque	≤0.001 Nm (IP 67)
Materials	Housing, Flange : Aluminium Shaft : Stainless steel
Shaft diameter:	6, 8, 10 mm (other diameters on request)
Bearings lifetime:	$2x10^9$ rev. at 100% of full rated shaft load (minimum)
Operating temperature	-40...+90°C -40 °F ... +180 °F
Weight approx.	350 g

Pulse Diagram

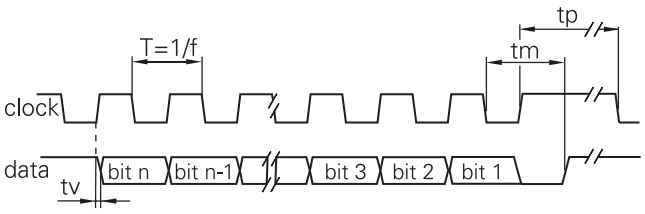

Clock frequency, f	50...2000 kHz for SSI up to 10MHz for BISS
Code	Binary or gray
Status and parity bit	On request
Monoflop time tm	>15µs
Clock time out	Programmable at factory

FNC AS 458B Series

Mechanical Dimensions

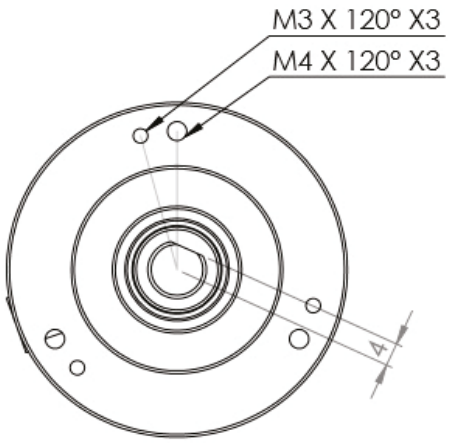

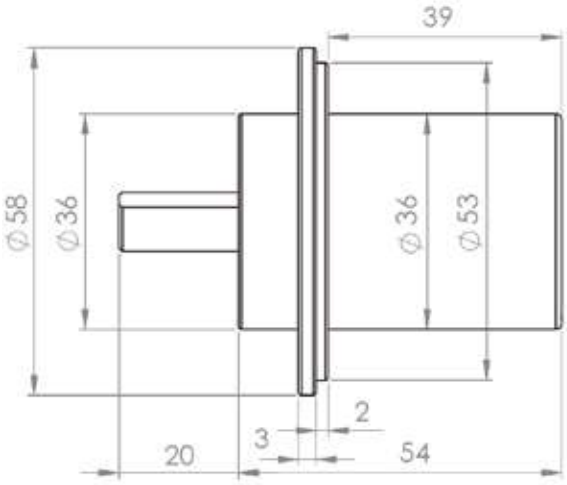

Terminal significance

+Vs	Encoder supply voltage.
0 V	Encoder ground connection relating to +Vs.
Data+	Positive data output.
Data-	Negative data output.
Clock+	Positive SSI clock input.
Clock-	Negative SSI clock input.
Direction	UP/DOWN counting direction input. This input is standart on High. UP/DOWN means ascending output data with clockwise shaft rotation when looking at flange.
Preset	Parameter for setting the encoder to a requested position value assigned to a defined shaft position of the system.The offset of encoder zero point and mechanical zero point is stored in the encoder.
Note	If needed, Include termination resistor R=120 Ohm between Data+ and Data- on control side.

Connector	Core colour	Signals	Description
Pin 1	blue	Clock+	Clock signal
Pin 2	blue-black	Clock-	Clock signal
Pin 3	orange	Data+	Data signal
Pin 4	orange-black	Data-	Data signal
Pin 5	gray	Zero	Zero setting input
Pin 6,7,8,9	–	n.c.	–
Pin 10	gray-black	up/down	direction input
Pin 11	white	0 V	GND
Pin 12	brown	+Vs	Supply voltage
Screen: not connected to housing			
Cable data: 4 x 2 x 0.14 mm^2			

Encoder Part Number

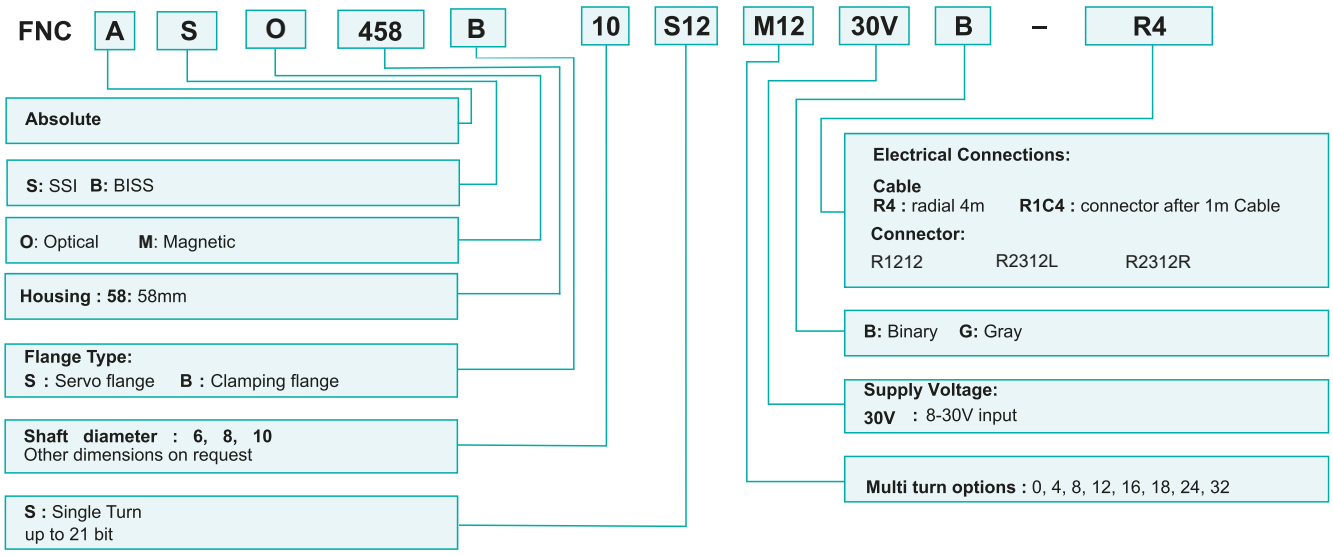

Absolute encoders - SSI / BiSS

Shaft with clamping or synchro flange
Single turn 12...19 bit,
Multi turn 4...32bit

FNC AS 58B & 58S Series

Features

- **Encoder single - or multiturn / SSI - BISS**
- **Magnetic Sensing (Optional optical sensing)**
- **Optical Single turn Resolution: 12...19 bit**
- **Magnetic Single turn Resolution: 9...13bit**
- **Multi turn 4...32bit**
- **Clamping flange or synchro flange**
- **Permanent check of code continuity**
- **Extreme resistance to shock and vibration**
- **Encoder with electronic reset**

Technical data - electrical ratings

Voltage supply	5.5VDC to 30VDC 4.75VDC to 5.5VDC
Protection:	Output short circuit protection. Reverse polarity protection (except 5V version)
Consumption w/o load	≤50 mA (24 VDC)
Interface	SSI or BiSS
Resolution (steps/turn)	Magnetic: 14 bit Optic: 21 bit
Absolute accuracy	Magnetic: ±0,1° Optic: ±0,01°
Optoelectronic life time	100.000 (min)
Code	Gray or binary
Inputs	SSI differential clock Direction Electronic zero setting Chip select (Optional)
Output frequency	up to 2MHz (SSI) up to 10MHz (BiSS)
Output circuit	SSI data linedriver RS485
Interference immunity	DIN EN 61000-6-2
Emitted interference	DIN EN 61000-6-4
Approval	CE

Accessories

Connectors and cables
CRM2312R M23 12 poles female connector or see page 206

Mounting coupling
PF481010 metal coupling or see page 204

Mounting accessories
YY TEO spring or see page 202-203

Technical data - mechanical design

Dimensions (flange)	ø58 mm
Shaft loading	≤140 N axial ≤240 N radial
Protection DIN EN 60529	IP 67
Operating speed	≤10000 rpm
Starting torque	≤0.025 Nm (IP 67)
Materials	Housing, Flange : Aluminium Shaft : Stainless steel
Shaft diameter:	6, 8, 10, 12 mm (other diameters on request)
Bearings lifetime:	$2x10^9$ rev. at 100% of full rated shaft load (minimum)
Operating temperature	-40...+110 °C -40 °C up to +120 °C (Storage)
Weight approx.	250 g

Pulse Diagram

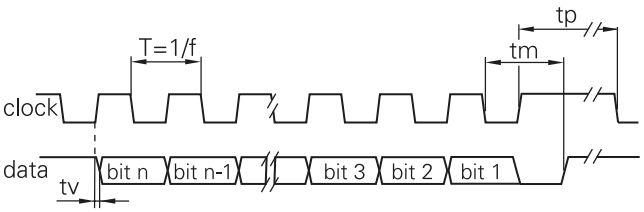

Clock frequency, f	50...2000 kHz for SSI up to 10MHz for BISS
Code	Binary or gray
Status and parity bit	On request
Monoflop time tm	>15µs
Clock time out	Programmable at factory

FNC AS 58B & 58S Series

Mechanical Dimensions

58B

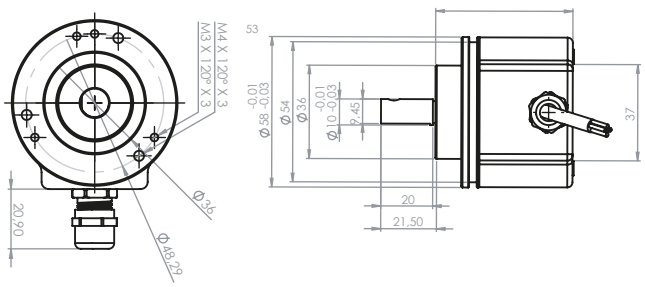

58S

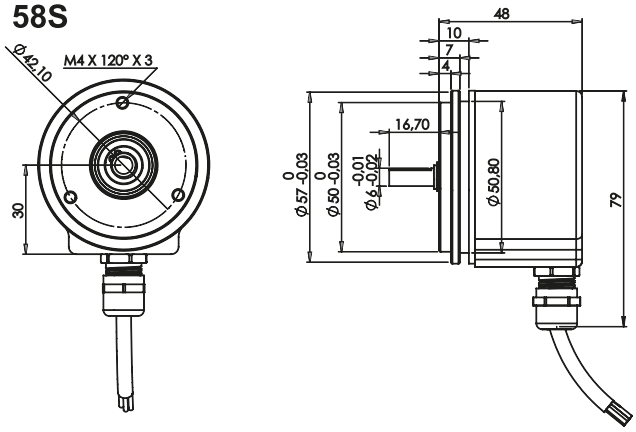

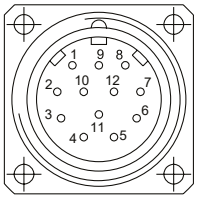

M2312R

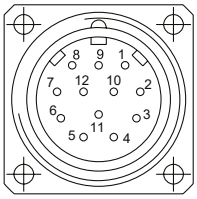

M2312L

Cable / Connector M23 male

Connector	Core colour	Signals	Description
Pin 1	blue	Clock+	Clock signal
Pin 2	blue-black	Clock-	Clock signal
Pin 3	orange	Data+	Data signal
Pin 4	orange-black	Data-	Data signal
Pin 5	gray	Zero	Zero setting input
Pin 6,7,8,9	–	n.c.	–
Pin 10	gray-black	up/down	direction input
Pin 11	white	0 V	GND
Pin 12	brown	+Vs	Supply voltage
Screen: not connected to housing			
Cable data: 4 x 2 x 0.14 mm²			

Terminal significance

+Vs	Encoder supply voltage.
0 V	Encoder ground connection relating to +Vs.
Data+	Positive data output.
Data-	Negative data output.
Clock+	Positive SSI clock input.
Clock-	Negative SSI clock input.
Zero	Input for setting a zero point anywhere within the encoder resolution. The zero setting operation is triggered by a Low impulse. Connect to +Vs after setting operation for maximum interference immunity. Impulse duration >2 ms.
Note	Include termination resistor R=120 Ohm between Data+ and Data- on control side.
Direction	UP/DOWN counting direction input. This input is standart on High. UP/DOWN means ascending output data with clock-wise shaft rotation when looking at flange.

Encoder Part Number

FNC | A | S | 58 | B | 10 | S12 | M12 | 30V | B | – | R2

Absolute

S: SSI **B:** BISS

Housing: 58 : 58mm

Flange Type:
S : Servo flange **B :** Clamping flange

Shaft diameter : 6, 8, 10, 12
Other dimensions on request

S : Single Turn
up to 21 bit

Electrical Connections:
Cable
R2 : radial 2m **A2 :** axial 2m
Connector:
R1212 R2312L R2312R

B: Binary **G:** Gray

Supply Voltage:
5V : 5V in / out **30V** : 5-30V in / out

Multi turn options : 4, 8, 12, 16, 20, 24, 32

Absolute encoders - SSI / BiSS

Shaft with clamping or synchro flange
Single turn 9...19 bit,
Multi turn 0...32 bit

FNC AS 36E Series

Features

- **Encoder single - or multiturn /SSI - BISS**
- **Magnetic or optical sensing**
- **Single turn resolution up to 22 bit**
- **Multi turn 0 ...16 bit**
- **Optional preset and direction input**
- **36 mm diameter body**
- **6 mm diameter solid shaft**

Technical data - electrical ratings

Voltage supply	8VDC to 30VDC
Protection:	Output short circuit protection. Reverse polarity protection (except 5V version)
Consumption w/o load	≤80 mA (24 VDC)
Interface	SSI or BiSS
Resolution (steps/turn)	Magnetic: 14 bit Optic: 21 bit
Absolute accuracy	Magnetic: ±0,1° Optic: ±0,01°
Optoelectronic life time	100.000 (min)
Code	Gray or binary
Inputs	SSI differential clock Direction Electronic zero setting
Output frequency	up to 2MHz (SSI) up to 10MHz (BiSS)
Output circuit	SSI data linedriver RS485
Interference immunity	DIN EN 61000-6-2
Emitted interference	DIN EN 61000-6-4
Approval	CE

Technical data - mechanical design

Dimensions (flange)	Ø 36mm
Shaft loading	≤20 N axial ≤40 N radial
Protection DIN EN 60529	IP 67
Operating speed	≤10000 rpm
Starting torque	≤0.001 Nm (IP 67)
Materials	Housing, Flange : Aluminium Shaft : Stainless steel
Shaft diameter:	6 (other diameters on request)
Bearings lifetime:	$2x10^9$ rev. at 100% of full rated shaft load (minimum)
Operating temperature	-40...+90°C -40 °F ... +180 °F
Weight approx.	250 g

Pulse Diagram

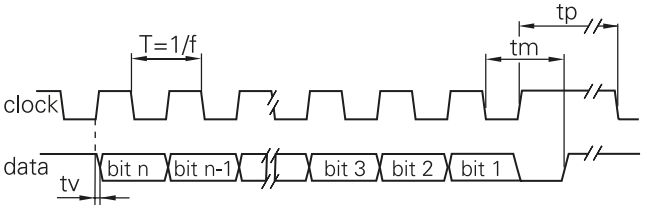

Clock frequency, f	50...2000 kHz for SSI up to 10MHz for BISS
Code	Binary or gray
Status and parity bit	On request
Monoflop time tm	>15µs
Clock time out	Programmable at factory

FNC AS 36E Series

Mechanical Dimensions

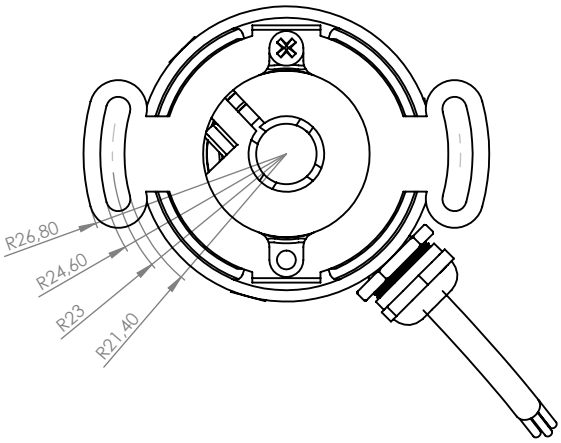

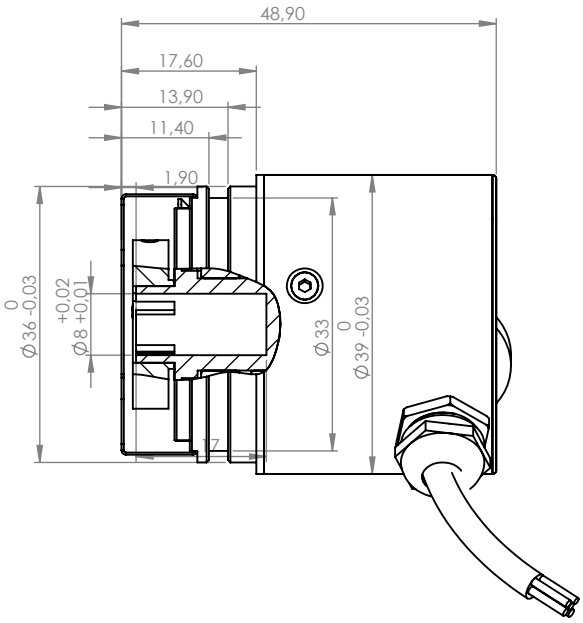

Terminal significance

+Vs	Encoder supply voltage.
0 V	Encoder ground connection relating to +Vs.
Data+	Positive data output.
Data-	Negative data output.
Clock+	Positive SSI clock input.
Clock-	Negative SSI clock input.
Direction	UP/DOWN counting direction input. This input is standart on High. UP/DOWN means ascending output data with clockwise shaft rotation when looking at flange.
Preset	Parameter for setting the encoder to a requested position value assigned to a defined shaft position of the system.The offset of encoder zero point and mechanical zero point is stored in the encoder.
Note	If needed, Include termination resistor R=120 Ohm between Data+ and Data- on control side.

Function	Color	Renk
Vcc.	Brown	Kahverengi
GND	White	Beyaz
Clock+	Blue	Mavi
Clock-	Blue-Black	Mavi-Beyaz
Data+	Orange	Turuncu
Data-	Orange-Black	Turuncu-Siyah

Encoder Part Number

FNC A S O 36 E 10 S12 M12 30V B – R4

- **A**: **Absolute**
- **S**: **S:** SSI **B:** BISS
- **O**: **O**: Optical **M**: Magnetic
- **36**: **Housing : 36:** 36mm
- **E**: **Flange Type:** **E:** End Hollow Shaft
- **10**: **Shaft diameter : 6, 8, 10** Other dimensions on request
- **S12**: **S :** Single Turn up to 21 bit
- **M12**: **Multi turn options :** 0, 4, 8, 12, 16, 18, 24, 32
- **30V**: **Supply Voltage:** **30V** : 8-30V input
- **B**: **B:** Binary **G:** Gray
- **R4**: **Electrical Connections:** **Cable** **R4 :** radial 4m **R1C4 :** connector after 1m Cable **Connector:** CRM1212 CRM2312L CRM2312R

Absolute encoders - SSI / BiSS

Shaft with clamping or synchro flange
Single turn 9... 21 bit,

FNC AS 50H Series

Features

- **Encoder single turn /SSI - BISS**
- **Magnetic or optical sensing**
- **Single turn resolution up to 21 bit**
- **Clamping flange or synchro flange**
- **Permanent check of code continuity**
- **Extreme resistance to shock and vibration**
- **Encoder with electronic reset**

Technical data - electrical ratings

Voltage supply	8VDC to 30VDC
Protection:	Output short circuit protection. Reverse polarity protection (except 5V version)
Consumption w/o load	≤80 mA (24 VDC)
Interface	SSI or BiSS
Resolution (steps/turn)	Magnetic: 14 bit Optic: 21 bit
Absolute accuracy	Magnetic: ±0,1° Optic: ±0,01°
Optoelectronic life time	100.000 (min)
Code	Gray or binary
Inputs	SSI differential clock Direction Electronic zero setting
Output frequency	up to 2MHz (SSI) up to 10MHz (BiSS)
Output circuit	SSI data linedriver RS485
Interference immunity	DIN EN 61000-6-2
Emitted interference	DIN EN 61000-6-4
Approval	CE

Technical data - mechanical design

Dimensions (flange)	50 mm
Shaft loading	≤20 N axial ≤40 N radial
Protection DIN EN 60529	IP 67
Operating speed	≤10000 rpm
Starting torque	≤0.001 Nm (IP 67)
Materials	Housing, Flange : Aluminium Shaft : Stainless steel
Shaft diameter:	6, 8, 10 mm (other diameters on request)
Bearings lifetime:	$2x10^9$ rev. at 100% of full rated shaft load (minimum)
Operating temperature	-40...+90°C -40 °F ... +180 °F
Weight approx.	350 g

Pulse Diagram

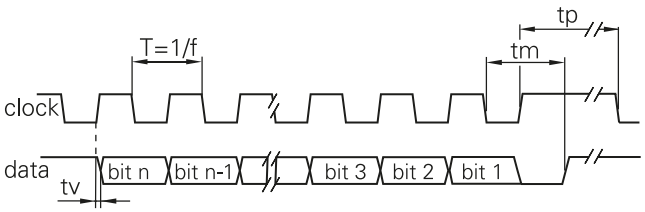

Clock frequency, f	50...2000 kHz for SSI up to 10MHz for BISS
Code	Binary or gray
Status and parity bit	On request
Monoflop time tm	>15µs
Clock time out	Programmable at factory

FNC AS 50H Series

Mechanical Dimensions

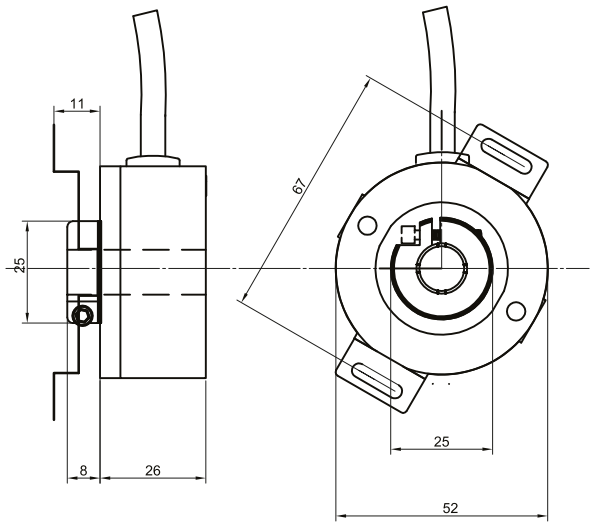

Connector	Core colour	Signals	Description
Pin 1	blue	Clock+	Clock signal
Pin 2	blue-black	Clock-	Clock signal
Pin 3	orange	Data+	Data signal
Pin 4	orange-black	Data-	Data signal
Pin 5	gray	Zero	Zero setting input
Pin 6,7,8,9	–	n.c.	–
Pin 10	gray-black	up/down	direction input
Pin 11	white	0 V	GND
Pin 12	brown	+Vs	Supply voltage
Screen: not connected to housing			

Cable data: 4 x 2 x 0.14 mm^2

Terminal significance

+Vs	Encoder supply voltage.
0 V	Encoder ground connection relating to +Vs.
Data+	Positive data output.
Data-	Negative data output.
Clock+	Positive SSI clock input.
Clock-	Negative SSI clock input.
Direction	UP/DOWN counting direction input. This input is standart on High. UP/DOWN means ascending output data with clockwise shaft rotation when looking at flange.
Preset	Parameter for setting the encoder to a requested position value assigned to a defined shaft position of the system.The offset of encoder zero point and mechanical zero point is stored in the encoder.
Note	If needed, Include termination resistor R=120 Ohm between Data+ and Data- on control side.

Encoder Part Number

FNC A S O 50 H 10 S12 30V B – R4

Absolute

S: SSI **B:** BISS

O: Optical **M**: Magnetic

Housing : 40: 40mm

Flange Type:
H: Hollow Shaft

Shaft diameter : 6, 8, 10
Other dimensions on request

S : Single Turn
up to 21 bit

Electrical Connections:
Cable
R4 : radial 4m **R1C4 :** connector after 1m Cable
Connector:
CRM1212 CRM2312L CRM2312R

B: Binary **G:** Gray

Supply Voltage:
30V : 8-30V input

Absolute encoders - SSI / BiSS

End Hollow Shaft - Through Hollow Shaft
Single turn 12...19 bit,
Multi turn 4...32bit

FNC AS 58E & 58H Series

Features

- **Encoder single - or multiturn / SSI - BISS**
- **Magnetic Sensing (Optional optical sensing)**
- **Optical Single turn Resolution: 12...19 bit**
- **Magnetic Single turn Resolution: 9...13bit**
- **Multi turn 4...32bit**
- **Clamping flange or synchro flange**
- **Permanent check of code continuity**
- **Extreme resistance to shock and vibration**
- **Encoder with electronic reset**

Technical data - electrical ratings

Voltage supply	5.5VDC to 30VDC 4.75VDC to 5.5VDC
Protection:	Output short circuit protection. Reverse polarity protection (except 5V version)
Consumption w/o load	≤50 mA (24 VDC)
Interface	SSI or BiSS
Resolution (steps/turn)	Magnetic: 14 bit Optic: 21 bit
Absolute accuracy	Magnetic: ±0,1° Optic: ±0,01°
Optoelectronic life time	100.000 (min)
Code	Gray or binary
Inputs	SSI differential clock Direction Electronic zero setting Chip select (Optional)
Output frequency	up to 2MHz (SSI) up to 10MHz (BiSS)
Output circuit	SSI data linedriver RS485
Interference immunity	DIN EN 61000-6-2
Emitted interference	DIN EN 61000-6-4
Approval	CE

Accessories

Connectors and cables
CRM2312R M23 12 poles female connector or see page 206

Mounting coupling
See page 204

Mounting accessories
YY TEO spring or see page 202-203

Technical data - mechanical design

Dimensions (flange)	ø58 mm
Shaft loading	≤140 N axial ≤240 N radial
Protection DIN EN 60529	IP54, IP65
Operating speed	≤10000 rpm
Starting torque	≤0.025 Nm (IP 67)
Materials	Housing, Flange : Aluminium Shaft : Stainless steel
Shaft diameter:	6, 8, 10, 12, 14 mm (other diameters on request)
Bearings lifetime:	$2x10^9$ rev. at 100% of full rated shaft load (minimum)
Operating temperature	-40...+110 °C -40 °C up to +120 °C (Storage)
Weight approx.	250 g

Pulse Diagram

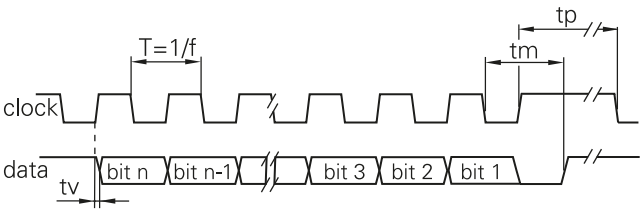

Clock frequency, f	50...2000 kHz for SSI up to 10MHz for BISS
Code	Binary or gray
Status and parity bit	On request
Monoflop time tm	>15µs
Clock time out	Programmable at factory

Mechanical Dimensions

58E

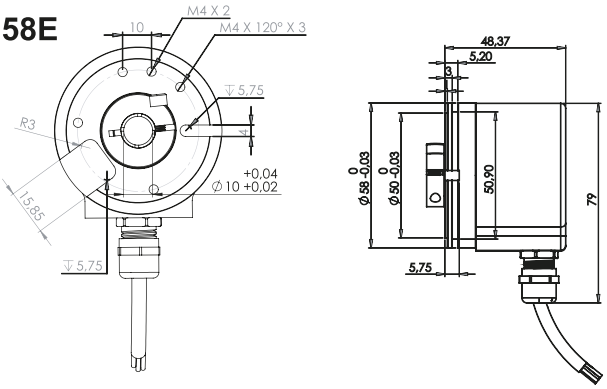

58H

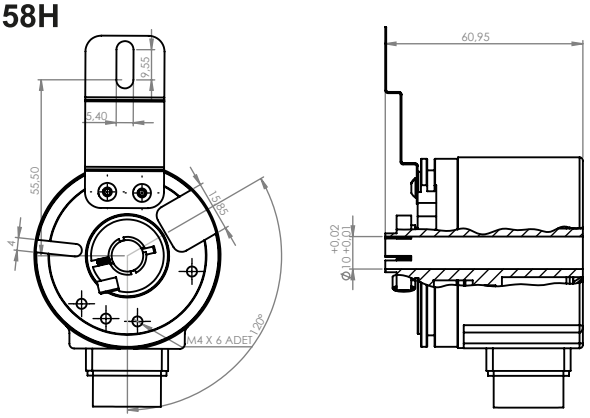

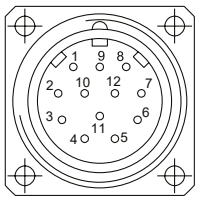

M2312R

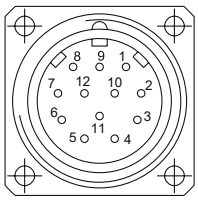

M2312L

Cable / Connector M23 male

Connector	Core colour	Signals	Description
Pin 1	blue	Clock+	Clock signal
Pin 2	blue-black	Clock-	Clock signal
Pin 3	orange	Data+	Data signal
Pin 4	orange-black	Data-	Data signal
Pin 5	gray	Zero	Zero setting input
Pin 6,7,8,9	–	n.c.	–
Pin 10	gray-black	up/down	direction input
Pin 11	white	0 V	GND
Pin 12	brown	+Vs	Supply voltage
Screen: not connected to housing			
Cable data: 4 x 2 x 0.14 mm²			

Terminal significance

+Vs	Encoder supply voltage.
0 V	Encoder ground connection relating to +Vs.
Data+	Positive data output.
Data-	Negative data output.
Clock+	Positive SSI clock input.
Clock-	Negative SSI clock input.
Zero	Input for setting a zero point anywhere within the encoder resolution. The zero setting operation is triggered by a Low impulse. Connect to +Vs after setting operation for maximum interference immunity. Impulse duration >2 ms.
Note	Include termination resistor R=120 Ohm between Data+ and Data- on control side.
Direction	UP/DOWN counting direction input. This input is standart on High. UP/DOWN means ascending output data with clock-wise shaft rotation when looking at flange.

Encoder Part Number

FNC A S 58 E 10 S12 M12 30V B – R2

- **A**: **Absolute**
- **S**: **S:** SSI **B:** BISS
- **58**: **Housing: 58 :** 58mm
- **E**: **Flange Type:** **E :** End hollow shaft **H :** Through hollow shaft
- **10**: **Shaft diameter : 6, 8, 10, 12, 14** Other dimensions on request
- **S12**: **S :** Single Turn up to 21 bit
- **M12**: **Multi turn options :** 4, 8, 12, 16, 20, 24, 32
- **30V**: **Supply Voltage:** **5V :** 5V in / out **30V :** 5-30V in / out
- **B**: **B:** Binary **G:** Gray
- **R2**: **Electrical Connections:** **Cable** **R2 :** radial 2m **A2 :** axial 2m **Connector:** R1212 R2312L R2312R

Absolute encoders - SSI / BiSS

Through Hollow Shaft
Single turn up to 18 bit
Multi turn up to 24 bit

FNC ASM 80H Series

Features

- **Encoder single - or multiturn / SSI - BISS**
- **Magnetic Sensing**
- **Magnetic Single turn Resolution up to 18 bit**
- **Multi turn 0...24 bit**
- **Through Hollow Shaft**
- **Permanent check of code continuity**
- **Extreme resistance to shock and vibration**
- **Encoder with electronic reset**

Technical data - electrical ratings

Voltage supply	8VDC to 30VDC 5 VDC
Protection:	Output short circuit protection. Reverse polarity protection (except 5V version)
Consumption w/o load	≤ 100 mA (24VDC)
Consumption w/o load	≤ 100 mA (5VDC)
Interface	SSI or BiSS
Resolution (steps/turn)	up to 18 bit
Absolute accuracy	0,1°
Optoelectronic life time	100.000 (min)
Code	Gray or binary
Inputs	SSI differential clock Direction Electronic zero setting
Output frequency	up to 2MHz (SSI) up to 10MHz (BiSS)
Output circuit	SSI data linedriver RS485
Interference immunity	DIN EN 61000-6-2
Emitted interference	DIN EN 61000-6-4
Approval	CE

Technical data - mechanical design

Dimensions (flange)	Ø80 mm
Shaft loading	≤20 N axial ≤40 N radial
Protection DIN EN 60529	IP 67
Operating speed	≤10000 rpm
Starting torque	≤0.001 Nm (IP 67)
Materials	Housing, Flange : Aluminium Shaft : Stainless steel
Shaft diameter:	25 mm (other diameters on request)
Bearings lifetime:	$2x10^9$ rev. at 100% of full rated shaft load (minimum)
Operating temperature	-40...+90°C -40 °F ... +180 °F
Weight approx.	250 g

Pulse Diagram

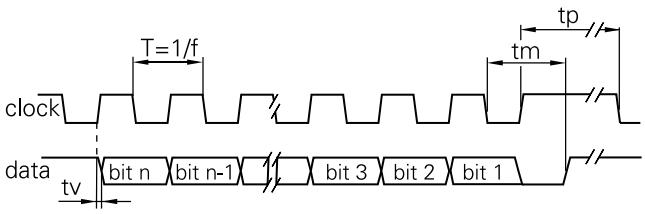

Clock frequency, f	50...2000 kHz for SSI up to 10MHz for BISS
Code	Binary or gray
Status and parity bit	On request
Monoflop time tm	>15µs
Clock time out	Programmable at factory

FNC ASM 80H Series

Mechanical Dimensions

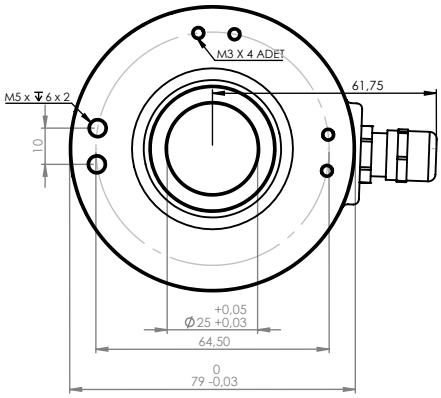

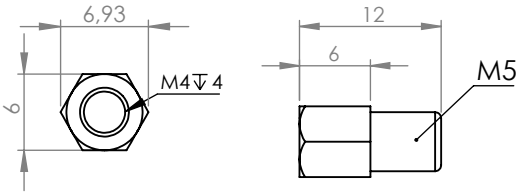

(Material : Brass)

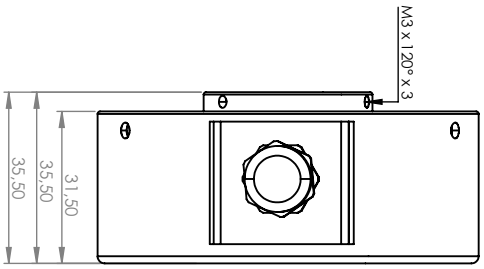

Terminal significance

+Vs	Encoder supply voltage.
0 V	Encoder ground connection relating to +Vs.
Data+	Positive data output.
Data-	Negative data output.
Clock+	Positive SSI clock input.
Clock-	Negative SSI clock input.
Note	If needed, Include termination resistor R=120 Ohm between Data+ and Data- on control side.

Core colour	Signals	Description
blue	Clock+	Clock signal
blue-black	Clock-	Clock signal
orange	Data+	Data signal
orange-black	Data-	Data signal
white	0 V	GND
brown	+Vs	Supply voltage
black	Shield	connected to housing

Cable data: 4 x 2 x 0.14 mm² Cable length : 2m

Encoder Part Number

FNC | A | S | M | 80 | H | 10 | S12 | M12 | 30V | B | – | R4

Absolute

S: SSI **B:** BISS

M: Magnetic

Housing : 80: 80mm

Flange Type:
H: Hollow Shaft

Shaft diameter : 6, 8, 10
Other dimensions on request

S : Single Turn
up to 18 bit

Electrical Connections:
Cable
R4 : radial 4m **R1C4 :** connector after 1m cable
Connector:
R1212 R2312L R2312R

B: Binary

Supply Voltage:
5V : 5V in / out **30V** : 5-30V in / out

M: Multi turn
up to 24 bit

Absolute encoders - CANopen

Shaft with clamping or synchro flange
Single turn 9...16 bit,
Multi turn 0...16 bit

FNC AC 36B & 36S Series

Features

- **Encoder single - or multiturn /CANopen**
- **Magnetic or optical sensing**
- **Single turn resolution up to 21 bit**
- **Multi turn 0 ...32 bit**
- **Clamping flange or synchro flange**
- **Permanent check of code continuity**
- **Extreme resistance to shock and vibration**
- **Encoder with electronic reset**

Technical data - electrical ratings

Voltage supply	8VDC to 30VDC
Protection:	Output short circuit protection. Reverse polarity protection (except 5V version)
Consumption w/o load	≤80 mA (24 VDC)
Interface	CANopen CiA DSP 301 V4.01, DSP 305 V1.0, DSP 406 V3.1
Resolution (steps/turn)	Magnetic: 14 bit Optic: 21 bit
Absolute accuracy	Magnetic: ±0,1° Optic: ±0,01°
Sensing method	Magnetic
Code	Binary
Code sequance	CW default, programmable
Programmable paramaters	Operating modes Total resolution Scaling Rotation speed monitoring Node ID Baud Rate
Note:	All paramaters change via microchip interface
Interference immunity	DIN EN 61000-6-2
Emitted interference	DIN EN 61000-6-4
Approval	CE

Technical data - mechanical design

Dimensions (flange)	ø40 mm
Shaft loading	≤40 N axial ≤80 N radial
Protection DIN EN 60529	IP54, IP65
Operating speed	≤10000 rpm
Starting torque	≤0.001Nm (IP 65)
Materials	Housing, Flange : Aluminium Shaft : Stainless steel
Shaft diameter:	6, 8, 10 mm (other diameters on request)
Bearings lifetime:	$2x10^9$ rev. at 100% of full rated shaft load (minimum)
Operating temperature	-40...+90 °C -40 °F ...+180 °F
Weight approx.	350 g

Terminal assignment

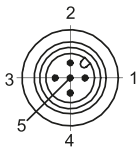

Connector M12

Conn.	Signals	Description
Pin 1	n.c.	–
Pin 2	+Vs	Supply voltage
Pin 3	CAN_GND	CAN Ground
Pin 4	CAN_H	Bus (dominant High)
Pin 5	CAN_L	Bus (dominant Low)

Absolute encoders - CANopen

Shaft with clamping or synchro flange
Single turn 9...16 bit,
Multi turn 0...16 bit

FNC AC 36B & 36S Series

Mechanical Dimensions

36B

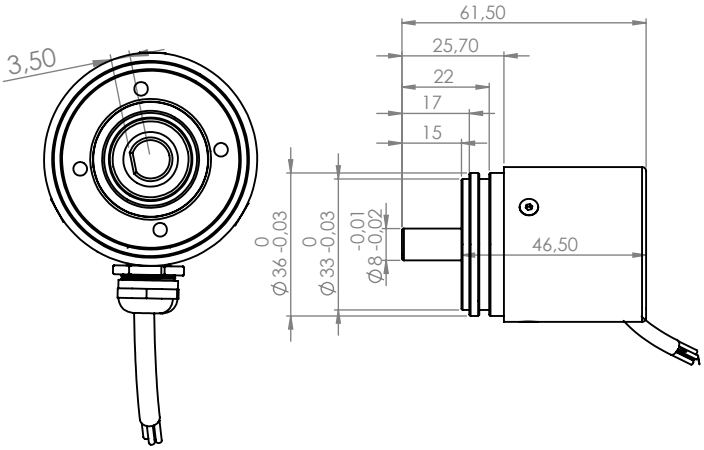

36S

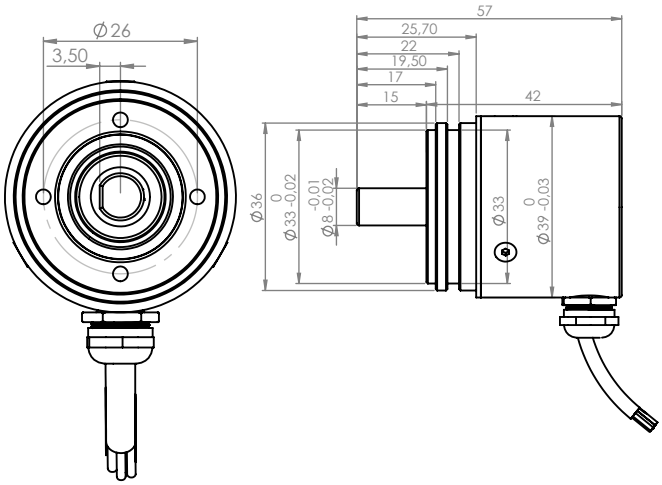

CANopen® features

Bus protocol	CANopen
Device profile	CANopen - CiA DS 406
Preset	Parameter for setting the encoder to a requested position value assigned to a defined shaft position of the system. The offset of encoder zero point and mechanical zero point is stored in the encoder.
Rotating direction	The rotating direction in which there have to be ascending or descending position values can be defined. Default setting: Ascending position values when looking at the flange and rotating the shaft clockwise.
Scaling	Parameter defining the steps per turn as well as the total resolution.
Diagnosis	The encoder supports the following error warnings: - Position error - Lithium battery voltage (multiturn)
Default	125 kbit/s, Node ID 1

Cable

Core colour	Signals	Description
white	0 V	Supply voltage
brown	+Vs	Supply voltage
green	CAN_H	Bus (dominant High
yellow	CAN_L	Bus (dominant Low)

Encoder Part Number

FNC A C O 36 S 10 S12 M12 30V – R4

Absolute

C: CANopen

O: Optical **M**: Magnetic

Housing: 40: 40 mm

Flange Type:
S : Servo flange **B** : Clamping flange

Shaft diameter : 6, 8, 10
Other dimensions on request

S : Single Turn
up to 21 bit

Electrical Connections:
Cable
R4 : radial 4m **R1C4** : connector after 1m Cable
Connector:
R1212 R2312L R2312R

Supply Voltage:
30V : 8-30V input

Multi turn options : 0, 8, 12, 16

Absolute encoders - CANopen

Shaft with clamping or synchro flange
Single turn 9...16 bit,
Multi turn 0...16 bit

FNC AC 458B Series

Features

- **Encoder single - or multiturn /CANopen**
- **Magnetic or optical sensing**
- **Single turn resolution up to 21 bit**
- **Multi turn 0 ...32 bit**
- **Clamping flange or synchro flange**
- **Permanent check of code continuity**
- **Extreme resistance to shock and vibration**
- **Encoder with electronic reset**

Technical data - electrical ratings

Voltage supply	8VDC to 30VDC
Protection:	Output short circuit protection. Reverse polarity protection (except 5V version)
Consumption w/o load	≤80 mA (24 VDC)
Interface	CANopen CiA DSP 301 V4.01, DSP 305 V1.0, DSP 406 V3.1
Resolution (steps/turn)	Magnetic: 14 bit Optic: 21 bit
Absolute accuracy	Magnetic: ±0,1° Optic: ±0,01°
Sensing method	Magnetic, Optic
Code	Binary
Code sequance	CW default, programmable
Programmable paramaters	Operating modes Total resolution Scaling Rotation speed monitoring Node ID Baud Rate
Note:	All paramaters change via microchip interface
Interference immunity	DIN EN 61000-6-2
Emitted interference	DIN EN 61000-6-4
Approval	CE

Technical data - mechanical design

Dimensions (flange)	ø58 mm
Shaft loading	≤40 N axial ≤80 N radial
Protection DIN EN 60529	IP54, IP65
Operating speed	≤10000 rpm
Starting torque	≤0.001Nm (IP 65)
Materials	Housing, Flange : Aluminium Shaft : Stainless steel
Shaft diameter:	6, 8, 10 mm (other diameters on request)
Bearings lifetime:	$2x10^9$ rev. at 100% of full rated shaft load (minimum)
Operating temperature	-40...+90 °C -40 °F ...+180 °F
Weight approx.	350 g

Mechanical Dimensions

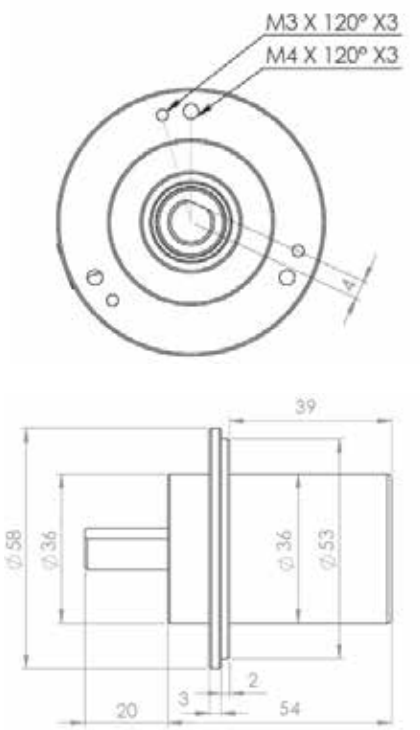

CANopen® features

Bus protocol	CANopen
Device profile	CANopen - CiA DS 406
Preset	Parameter for setting the encoder to a requested position value assigned to a defined shaft position of the system. The offset of encoder zero point and mechanical zero point is stored in the encoder.
Rotating direction	The rotating direction in which there have to be ascending or descending position values can be defined. Default setting: Ascending position values when looking at the flange and rotating the shaft clockwise.
Scaling	Parameter defining the steps per turn as well as the total resolution.
Diagnosis	The encoder supports the following error warnings: - Position error - Lithium battery voltage (multiturn)
Default	125 kbit/s, Node ID 1

Terminal assignment

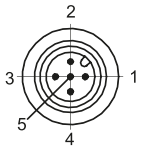

Connector M12

Conn.	Signals	Description
Pin 1	n.c.	–
Pin 2	+Vs	Supply voltage
Pin 3	CAN_GND	CAN Ground
Pin 4	CAN_H	Bus (dominant High)
Pin 5	CAN_L	Bus (dominant Low)

Cable

Core colour	Signals	Description
white	0 V	Supply voltage
brown	+Vs	Supply voltage
green	CAN_H	Bus (dominant High
yellow	CAN_L	Bus (dominant Low)

Encoder Part Number

FNC A C O 458 BZ 10 S12 M12 30V B – R4

Absolute

C: CANopen

O: Optical **M**: Magnetic

Housing: 58: 58mm

Flange Type:
S : Servo flange **B :** Clamping flange

Shaft diameter : 6, 8, 10
Other dimensions on request

S : Single Turn
up to 21 bit

Electrical Connections:
Cable
R4 : radial 4m **R1C4 :** connector after 1m cable
Connector:
R1212 R2312L R2312R

B: Binary

Supply Voltage:
5V : 5V in / out **30V** : 5-30V in / out

Multi turn options : 0, 4, 8, 12, 16

Absolute encoders - Parallel

Shaft with synchro and clamping flange
Magnetic single turn 12 bit encoder

FNC APA 50B Series

Features

- **Absolute encoder with parallel interface**
- **Magnetic sensing**
- **Resolution: up to 12 bit**
- **Synchro or clamping flange**
- **Optional Preset input**
- **Optional Direction input**

Technical data - electrical ratings

Voltage supply	5V to 30V DC
Protection:	Reverse & over voltage Output short circuit
Consumption w/o load	≤60 mA (outputs unloaded)
Interface	Parallel
Resolution (steps/turn)	up to 14 bit
Absolute accuracy	≤ ±0.35°
Sensing methode	Magnetic
Code	Gray or binary
Inputs	Direction (CW / CCW) Preset (Zero setting)
Direction of rotation	Output is incremented by CW (as viewed from the shaft side)
Initializing time	Typ. 60ms after power on
Max. responese freq.	10 kHz
Output capacity	16mA (sink/source)
Output circuit	Push-Pull (opt. Open-Collector)
Interference immunity	DIN EN 61000-6-2
Emitted interference	DIN EN 61000-6-4
Approval	CE

Technical data - mechanical design

Dimensions (flange)	ø50 mm
Shaft loading	≤ 20 N axial ≤ 30 N radial
Protection DIN EN 60529	IP 54 (optional IP65)
Operating speed	≤ 3000 rpm
Starting torque	≤ 0.001 Nm
Materials	Housing, Flange : Aluminium Shaft :Stainless steel
Shaft diameter:	6, 8, 10, 12 mm (other diameters on request)
Bearings lifetime:	$2x10^9$ rev. at 100% of full rated shaft load (minimum)
Operating temperature	-20 to +85 °C
Weight approx.	180 g

Note: Custom (non-binary) resolutions can be implemented on request. eg. 360 or 1000.

FNC APA 50B Series

Mechanical Dimensions

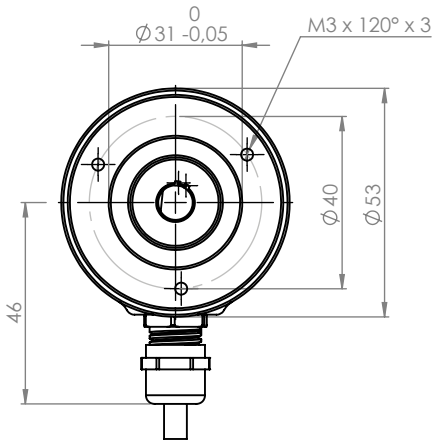

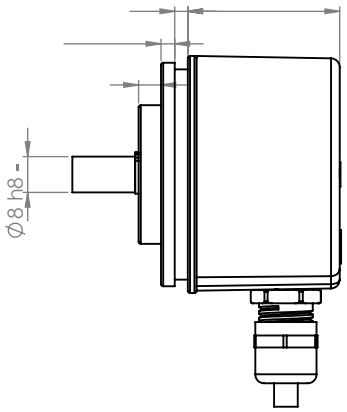

Cable Wiring / Connector

Function	Connector	Color	Renk
+VB	pin 1	Brown	Kahve
GND	pin 2	White	Beyaz
Bit 0	pin 3	Green	Yeşil
Bit 1	pin 4	Green-Black	Yeşil-Siyah
Bit 2	pin 5	Yellow	Sarı
Bit 3	pin 6	Yellow-Black	Sarı-siyah
Bit 4	pin 7	Blue	Mavi
Bit 5	pin 8	Blue-Black	Mavi-Siyah
Bit 6	pin 9	Orange	Turuncu
Bit 7	pin 10	Orange-Black	Turuncu-Siyah
Bit 8	pin 11	Red	Kırmızı
Bit 9	pin 12	Red-Black	Kırmızı-Siyah
Bit 10	pin 13	Pink	Pembe
Bit 11	pin 14	Pink-Black	Pembe-Siyah
PRESET	pin 15	Gray	Gri
DIRECTION	pin 16	Gray-Black	Gri-Siyah

NOTE : Preset and Direction inputs are optional

Connector is free hanging, inline type

Encoder Part Number

FNC | **A** | **PA** | **50** | **B** | **8** | **S12** | **30V** | **B** | **F** | **–** | **R2**

Absolute

PA: Parallel

Housing:
50 : 50mm

Flange Type:
S : Servo flange
B : Clamping flange

Shaft diameter : 8, 10, 12mm
Other dimensions and custom geometry on request

S : Single Turn: (up to 12 bit)

Electrical Connections:

Cable
R2 : radial 2m, shield not connected (standart)
R5 : radial 5m, shield not connected (standart)
RCX : Custom cable assembly
Connector: Customer specific

F: Clockwise increase
R: Counterclockwise increase

B: Binary
G: Gray
D: Binary Coded Decimal
E: Gray Excess

Supply Voltage:
5V : 5V ± 5%
30V : 5V to -30V

Absolute encoders - SSI / BiSS + SinCos

Integral bearing for integration in motors

FNC ASS 58 Series

Features

- **Encoder singleturn, SSI / BiSS + SinCos**
- **Optical sensing**
- **Resolution: 13 bit standard, programmable**
- **2048 SinCos signal**
- **Clamping flange or synchro flange**
- **Permanent check of code continuity**
- **Extreme resistance to shock and vibration**
- **Encoder with electronic reset**

Technical data - electrical ratings

Voltage supply	5.5VDC to 30VDC 4.75VDC to 5.5VDC
Protection:	Output short circuit protection. Reverse polarity protection (except 5V version)
Consumption w/o load	≤50 mA (24 VDC)
Interface	SSI or BiSS
Resolution (steps/turn)	up to 19 bit
Absolute accuracy	±0.025°
Optoelectronic life time	100.000 (min)
Code	Gray or binary
Inputs	SSI differential clock Direction Electronic zero setting Chip select (Optional)
Output frequency	up to 2MHz (SSI) up to 10MHz (BiSS)
Output circuit	SSI data linedriver RS485 2048 Sin/Cos signals
Interference immunity	DIN EN 61000-6-2
Emitted interference	DIN EN 61000-6-4
Approval	CE

Technical data - mechanical design

Dimensions (flange)	ø58 mm
Shaft loading	≤140 N axial ≤240 N radial
Protection DIN EN 60529	IP54, IP65
Operating speed	≤10000 rpm
Starting torque	≤0.025 Nm (IP 67)
Materials	Housing, Flange : Aluminium Shaft : Stainless steel
Shaft diameter:	6, 8, 10, 12 mm, standart 1:10 taper shaft, optional
Bearings lifetime:	$2x10^9$ rev. at 100% of full rated shaft load (minimum)
Operating temperature	-40...+110 °C -40 °C up to +120 °C (Storage)
Weight approx.	250 g

SSI Pulse Diagram

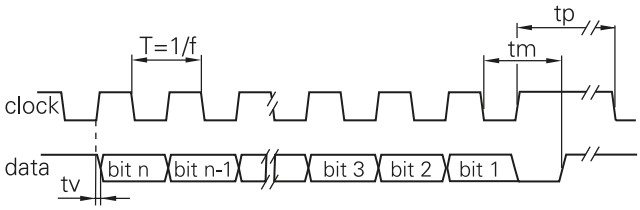

Clock frequency, f	50...2000 kHz for SSI up to 10MHz for BISS
Code	Binary or gray
Status and parity bit	On request
Monoflop time tm	>15µs
Clock time out	Programmable at factory

Accessories

Connectors and cables
CRM2312R M23 12 poles female connector or see page 206

Mounting coupling
PF481010 metal coupling or see page 204

Mounting accessories
YY TEO spring or see page 202-203

2048 SinCos pulse diagram

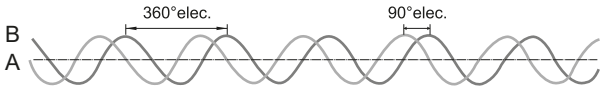

Signals shown at CW rotation with view on shaft's end

FNC ASS 58 Series

Mechanical Dimensions

58B

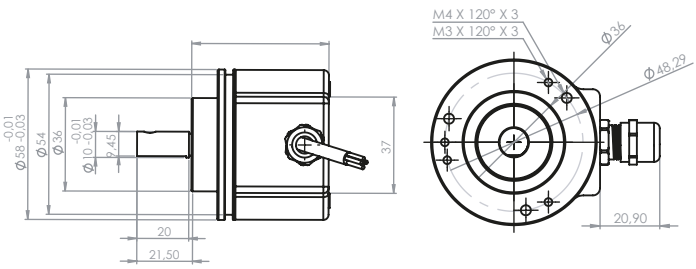

58S

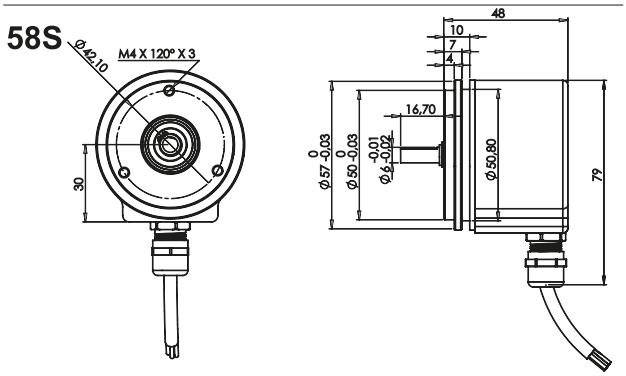

58E

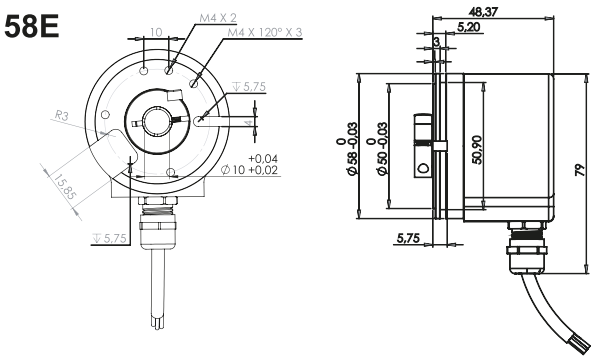

Cable / Connector M23 male

Connector	Core colour	Signals	Description
Pin 1	blue	Clock+	Clock signal
Pin 2	blue-black	Clock-	Clock signal
Pin 3	orange	Data+	Data signal
Pin 4	orange-black	Data-	Data signal
Pin 5	gray	Zero	Zero setting input
Pin 6,7,8,9	see connection blow		
Pin 10	gray-black	up/down	direction input
Pin 11	white	0 V	GND
Pin 12	brown	+Vs	Supply voltage
Screen: not connected to housing			
Cable data: 4 x 2 x 0.14 mm^2			

Terminal significance

+Vs	Encoder supply voltage.
0 V	Encoder ground connection relating to +Vs.
Data+	Positive data output.
Data-	Negative data output.
Clock+	Positive SSI clock input.
Clock-	Negative SSI clock input.
Zero	Input for setting a zero point anywhere within the encoder resolution. The zero setting operation is triggered by a Low impulse. Connect to +Vs after setting operation for maximum interference immunity. Impulse duration >2 ms.
Note	Include termination resistor R=120 Ohm between Data+ and Data- on control side.
Direction	UP/DOWN counting direction input. This input is standart on High. UP/DOWN means ascending output data with clock-wise shaft rotation when looking at flange.

Encoder Part Number

FNC A S S 58 S 10 S12 SC2 30V B – R4

- **A**: **Absolute**
- **S**: **S:** SSI **B:** BISS
- **S**: **S: 2048 1, Vpp**
- **58**: **Housing 58:** 58mm
- **S**: **Flange Type:** **S :** Servo flange **B :** Clamping flange
- **10**: **Shaft diameter : 6, 8, 10, 12** Other dimensions on request
- **S12**: **S :** Single Turn 12...19 bit options
- **SC2**: **SC1:** 1024 SinCos; **SC2:** 2048 Sincos; **SC4:** 4096 Sincos
- **30V**: **Supply Voltage:** **5V** : 5V in / out **30V** : 5-30V in / out
- **B**: **B:** Binary **G:** Gray
- **R4**: **Electrical Connections:** **Cable** **R4 :** radial 4m **R1C4 :** connector after 1m Cable; **Connector:** R1212 R2312L R2312R

Absolute encoders - CANopen

Shaft with clamping or synchro flange
Single turn 12...19 bit,
Multi turn 4...32bit

FNC AC 58B & 58S & 58E & 58H Series

Features

- **Encoder single - or multiturn / CANopen**
- **Magnetic Sensing**
- **Optical Single turn Resolution: 12...19 bit (optional)**
- **Magnetic Single turn Resolution: 9...13bit**
- **Multi turn 4...32bit**
- **Clamping flange or synchro flange**
- **Extreme resistance to shock and vibration**
- **Permanent check of code continuity**
- **Resolution end zero point programmable**

echnical data - electrical ratings

oltage supply	
Protection:	Output short circuit protection. Reverse polarity protection (except 5V version)
Consumption w/o load	≤100 mA (24 VDC)
	CANopen CiA DSP 301 V4.01, DSP 305 V1.0, DSP 406 V3.1
Resolution (steps/turn)	Magnetic: 14 bit Optic: 21 bit
Absolute accuracy	Magnetic: ±0,1° Optic: ±0,01°
Sensing method	Magnetic
	Binary
	CW default, programmable
Programmable	Operating modes Total resolution Scaling Rotation speed monitoring
Interference immunity	DIN EN 61000-6-2
Emitted interference	DIN EN 61000-6-4
Approval	

Accessories

Connectors and cables
CRM2312R M23 12 poles female connector or see page 206

Mounting coupling
PF481010 metal coupling or see page 204

Mounting accessories
YY TEO spring or see page 202-203

echnical data - mechanical design

Dimensions (flange)	ø58 mm
Shaft loading	≤40 N axial ≤60 N radial
Protection DIN EN 60529	
Operating speed	≤
Starting torque	≤0.025 Nm (IP 65)
Materials	Housing, Flange : Aluminium Shaft : Stainless steel
Shaft diameter:	6, 8, 10, 12 mm (other diameters on request)
Bearings lifetime:	9 . at 100% of full rated shaft load (minimum)
Operating temperature	-40...+110 °C -40 °C up to +120 °C (Storage)
eight approx.	

Terminal assignment

Connector M12

Signals	Description
Pin 1	
Pin 2	Supply voltage
Pin 3	
Pin 4	Bus (dominant High)
Pin 5	Bus (dominant Low)

FNC AC 58B & 58S & 58E & 58H Series

Mechanical Dimensions

58B

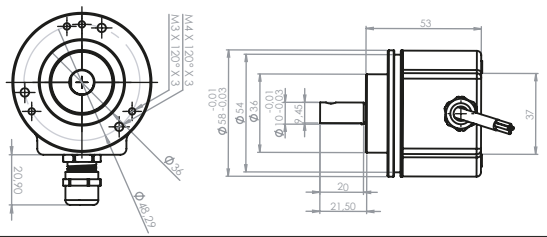

58S

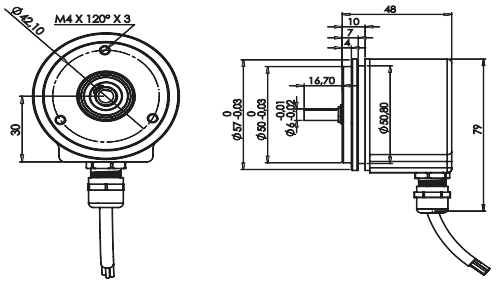

58E

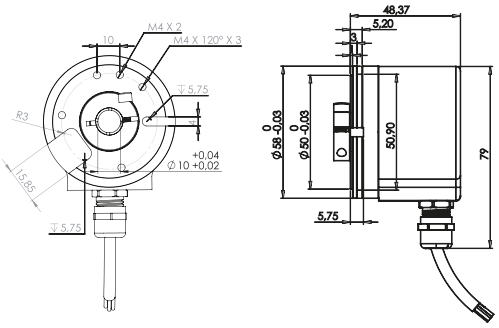

58H

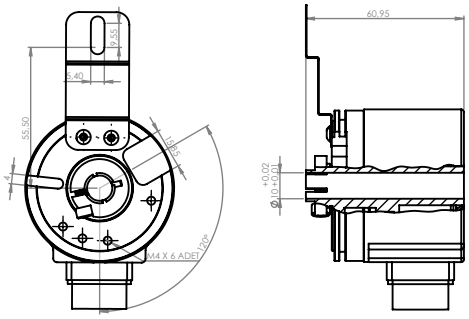

CANopen® features

Bus protocol	CANopen
Device profile	CANopen - CiA DS 406
Operating modes	- Event-triggered / Time-triggered - Sync (cyclic)
Preset	Parameter for setting the encoder to a requested position value assigned to a defined shaft position of the system. The offset of encoder zero point and mechanical zero point is stored in the encoder.
Rotating direction	The rotating direction in which there have to be ascending or descending position values can be defined. Default setting: Ascending position values when looking at the flange and rotating the shaft clockwise.
Scaling	Parameter defining the steps per turn as well as the total resolution.
Diagnosis	The encoder supports the following error warnings: - Position error - Lithium battery voltage (multiturn)
Node Monitoring	Heartbeat
Default	125 kbit/s, Node ID 1

Cable

Core colour	Signals	Description
white	0 V	Supply voltage
brown	+Vs	Supply voltage
green	CAN_H	Bus (dominant High
yellow	CAN_L	Bus (dominant Low)

Encoder Part Number

FNC | **A** | **C** | **O** | **58** | **B** | **10** | **S12** | **M12** | **30V** | **B** | **–** | **R2**

Absolute

C: CANopen

O: Optic
M: Magnetic

Housing
58 : 58 mm

Flange Type:
S : Servo flange **B :** Clamping flange
E : End hollow shaft **H :** Through hollow shaft

Shaft diameter : 6, 8, 10, 12
Other dimensions on request

S : Single Turn
up to 21 bit

Electrical Connections:
Cable
R2 : radial 2m **A2 :** axial 2m
Connector:
R1212 R2312L R2312R

B: Binary

Supply Voltage:
5V : 5V in / out **30V** : 5-30V in / out

Multi turn options : 4, 8, 12, 16, 20, 24, 32

Absolute encoders - CANopen

End Hollow Shaft - Through Hollow Shaft
Single turn 12...19 bit,
Multi turn 4...32bit

FNC AC 58B & 58S & 58E Series

Features

- Encoder single - or multiturn / CANopen
- Magnetic Sensing (Optional optical sensing)
- Optical Single turn Resolution: 12...19 bit (optional)
- Magnetic Single turn Resolution: 9...13bit
- Multi turn 4...32bit
- Clamping flange or synchro flange
- Extreme resistance to shock and vibration
- Permanent check of code continuity
- Resolution end zero point programmable

Technical data - electrical ratings

Voltage supply	5.5VDC to 30VDC 4.75VDC to 5.5VDC
Protection:	Output short circuit protection. Reverse polarity protection (except 5V version)
Consumption w/o load	≤100 mA (24 VDC)
Interface	CANopen CiA DSP 301 V4.01, DSP 305 V1.0, DSP 406 V3.1
Resolution (steps/turn)	Magnetic: 14 bit Optic: 21 bit
Absolute accuracy	Magnetic: ±0,1° Optic: ±0,01°
Sensing method	Magnetic
Code	Binary
Code sequance	CW default, programmable
Programmable paramaters	Operating modes Total resolution Scaling Rotation speed monitoring
Interference immunity	DIN EN 61000-6-2
Emitted interference	DIN EN 61000-6-4
Approval	CE

Technical data - mechanical design

Dimensions (flange)	ø58 mm
Shaft loading	≤40 N axial ≤60 N radial
Protection DIN EN 60529	IP54, IP65
Operating speed	≤10000 rpm
Starting torque	≤0.025 Nm (IP 65)
Materials	Housing, Flange : Aluminium Shaft : Stainless steel
Shaft diameter:	6, 8, 10, 12, 14 mm (other diameters on request)
Bearings lifetime:	$2x10^9$ rev. at 100% of full rated shaft load (minimum)
Operating temperature	-40...+110 °C -40 °C up to +120 °C (Storage)
Weight approx.	250 g

Accessories

Connectors and cables
CRM2312R M23 12 poles female connector or see page 206

Mounting coupling
See page 204

Mounting accessories
YY TEO spring or see page 202-203

FNC AC 58B & 58S & 58E Series

Mechanical Dimensions

58S

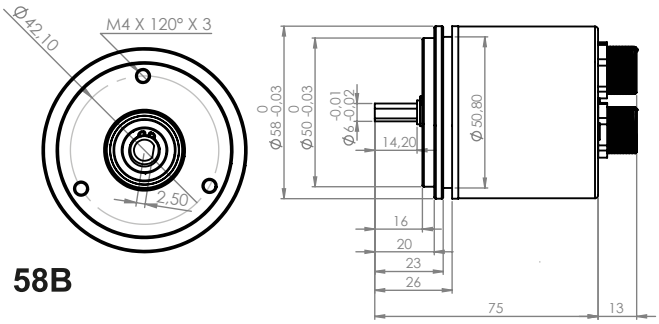

58B

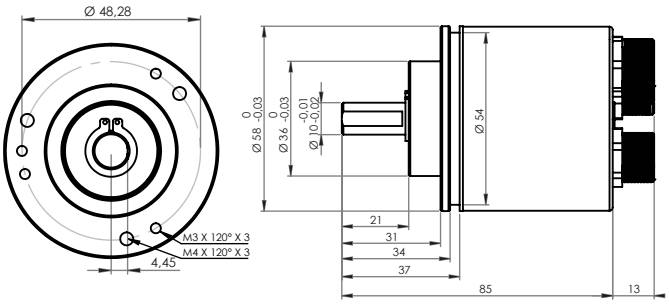

58E

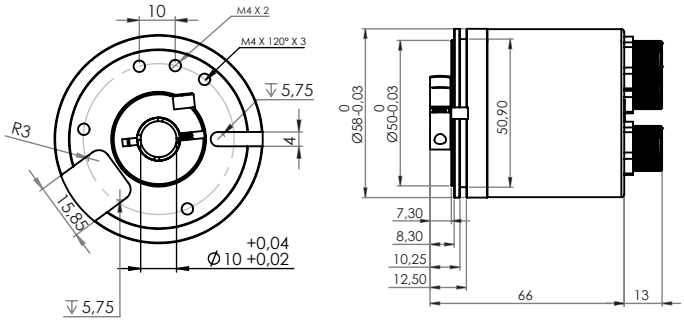

CANopen® features

Bus protocol	CANopen
Device profile	CANopen - CiA DS 406
Operating modes	- Event-triggered / Time-triggered - Sync (cyclic)
Preset	Parameter for setting the encoder to a requested position value assigned to a defined shaft position of the system. The offset of encoder zero point and mechanical zero point is stored in the encoder.
Rotating direction	The rotating direction in which there have to be ascending or descending position values can be defined. Default setting: Ascending position values when looking at the flange and rotating the shaft clockwise.
Scaling	Parameter defining the steps per turn as well as the total resolution.
Diagnosis	The encoder supports the following error warnings: - Position error - Lithium battery voltage (multiturn)
Node Monitoring	Heartbeat
Default	125 kbit/s, Node ID 1

Cable

Core colour	Signals	Description
white	0 V	Supply voltage
brown	+Vs	Supply voltage
green	CAN_H	Bus (dominant High
yellow	CAN_L	Bus (dominant Low)

Encoder Part Number

FNC **A** **C** **O** **58** **E** **10** **S12** **M12** **30V** **B** – **3M12**

- **Absolute**
- **C:** CANopen
- **O:** Optic
  M: Magnetic
- **Housing**
  58 : 58 mm
- **Flange Type:**
  E : End hollow shaft **H :** Through hollow shaft
- **Shaft diameter : 6, 8, 10, 12**
  Other dimensions on request
- **S :** Single Turn
  up to 21 bit
- **Electrical Connections:**
  Cable
  R2 : radial 2m **A2 :** axial 2m
  Connector:
  R1212 R2312L R2312R
- **B:** Binary
- **Supply Voltage:**
  5V : 5V in / out **30V :** 5-30V in / out
- **Multi turn options :** 4, 8, 12, 16, 20, 24, 32

Absolute encoders - CANopen

Shaft with clamping or synchro flange
Single turn 9...14 bit,
Multi turn 0...32 bit

FNC AC 36E Series

Features

- **Encoder single - or multiturn /CANopen**
- **Magnetic or optical sensing**
- **Single turn resolution up to 22 bit**
- **Multi turn 0 ...16 bit**
- **Optional preset and direction input**
- **36 mm diameter body**
- **6 mm diameter solid shaft**

Technical data - electrical ratings

Voltage supply	5.5VDC to 30VDC 4.75VDC to 5.5VDC
Protection:	Output short circuit protection. Reverse polarity protection (except 5V version)
Consumption w/o load	≤100 mA (24 VDC)
Interface	CANopen CiA DSP 301 V4.01, DSP 305 V1.0, DSP 406 V3.1
Resolution (steps/turn)	Magnetic: 14 bit Optic: 21 bit
Absolute accuracy	Magnetic: ±0,1° Optic: ±0,01°
Sensing method	Magnetic
Code	Binary
Code sequance	CW default, programmable
Programmable paramaters	Operating modes Total resolution Scaling Rotation speed monitoring
Interference immunity	DIN EN 61000-6-2
Emitted interference	DIN EN 61000-6-4
Approval	CE

Technical data - mechanical design

Dimensions (flange)	ø36 mm
Shaft loading	≤40 N axial ≤60 N radial
Protection DIN EN 60529	IP54, IP65
Operating speed	≤10000 rpm
Starting torque	≤0.025 Nm (IP 65)
Materials	Housing, Flange : Aluminium Shaft : Stainless steel
Shaft diameter:	6, 8, 10, 12 mm (other diameters on request)
Bearings lifetime:	$2x10^9$ rev. at 100% of full rated shaft load (minimum)
Operating temperature	-40...+110 °C -40 °C up to +120 °C (Storage)
Weight approx.	250 g

Terminal assignment

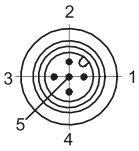

Connector M12

Conn.	Signals	Description
Pin 1	n.c.	–
Pin 2	+Vs	Supply voltage
Pin 3	CAN_GND	CAN Ground
Pin 4	CAN_H	Bus (dominant High)
Pin 5	CAN_L	Bus (dominant Low)

Mechanical Dimensions

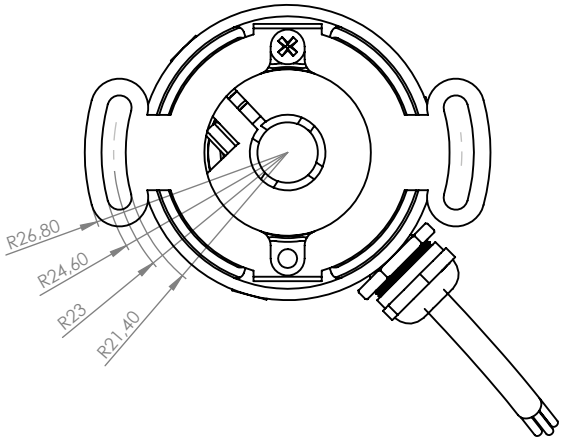

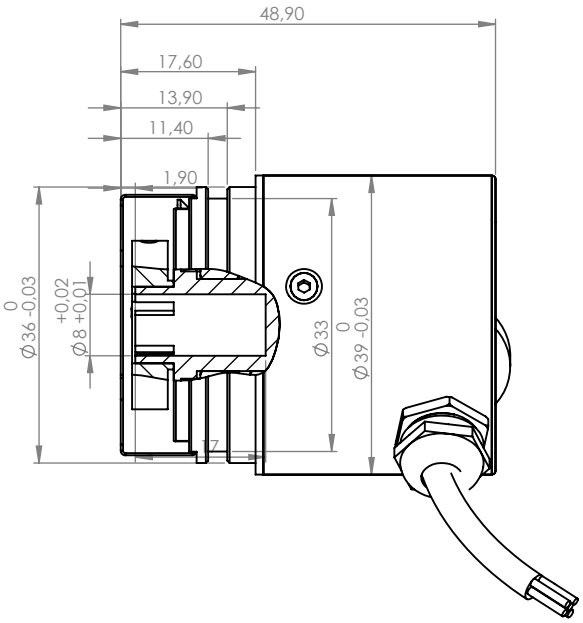

Terminal significance

Bus protocol	CANopen
Device profile	CANopen - CiA DS 406
Preset	Parameter for setting the encoder to a requested position value assigned to a defined shaft position of the system. The offset of encoder zero point and mechanical zero point is stored in the encoder.
Rotating direction	The rotating direction in which there have to be ascending or descending position values can be defined. Default setting: Ascending position values when looking at the flange and rotating the shaft clockwise.
Scaling	Parameter defining the steps per turn as well as the total resolution.
Diagnosis	The encoder supports the following error warnings: - Position error - Lithium battery voltage (multiturn)
Default	125 kbit/s, Node ID 1

Cable

Core colour	Signals	Description
white	0 V	Supply voltage
brown	+Vs	Supply voltage
green	CAN_H	Bus (dominant High
yellow	CAN_L	Bus (dominant Low)

Encoder Part Number

FNC A C O 36 E 10 S12 M12 30V B – R4

- **A**: **Absolute**
- **C**: **S:** SSI **B:** BISS
- **O**: **O**: Optical **M**: Magnetic
- **36**: **Housing : 36:** 36mm
- **E**: **Flange Type:** **E:** End Hollow Shaft
- **10**: **Shaft diameter : 6, 8, 10** Other dimensions on request
- **S12**: **S :** Single Turn up to 21 bit
- **M12**: **Multi turn options :** 0, 4, 8, 12, 16, 18, 24, 32
- **30V**: **Supply Voltage:** **30V** : 8-30V input
- **B**: **B:** Binary **G:** Gray
- **R4**: **Electrical Connections:** **Cable** **R4 :** radial 4m **R1C4 :** connector after 1m Cable **Connector:** CRM1212 CRM2312L CRM2312R

FENAC Automation Control

Absolute encoders bus cover

- Modular
- Flexibilitiy

Motion Control Products

Absolute encoders - Modular bus covers

Solid shaft with clamping or synchro flange
Magnetic single- or multiturn encoders

FNC AC 58B Bus Cover Series

Canopen & Profibus

Features

- **Encoder single- or multiturn / bus cover**
- **Magnetic sensing**
- **Single turn Resolution: 12...19 bit**
- **Multi turn 4...32bit**
- **Clamping flange or synchro flange**
- **Permanent check of code continuity**
- **Extreme resistance to shock and vibration**
- **Modular fieldbus interfaces**
- **Profibus / CANopen®**

Technical data - electrical ratings

Voltage supply	5.5VDC to 30VDC 4.75VDC to 5.5VDC 8VDC to 30VDC
Protection:	Output short circuit protection. Reverse polarity protection
Consumption w/o load	≤50 mA (24 VDC)
Initializing time typ.	170 ms after power on
Interface	Profibus / CANopen® /
Resolution (steps/turn)	9 to 16 bit
Number of revolution	4, 8, 12, 16, 24, 32,
Code	Binary
Code sequence	CW default, programmable
Absolute accuracy	±0,35°
Device adress	Rotary switch in bus cover
Interference immunity	DIN EN 61000-6-2
Emitted interference	DIN EN 61000-6-4
Approval	CE
Programmable parameters	Steps per revolution Number of revolutions Preset Scaling Rotating direction
Diagnostic functions	Position or parameter error Multiturn sensing
Status indicator	RED&GREEN-LED integrated in bus cover

Technical data - mechanical design

Dimensions (flange)	ø58 mm
Shaft loading	≤140 N axial ≤240 N radial
Protection DIN EN 60529	IP54, IP65
Operating speed	≤10000 rpm
Starting torque	≤0.025 Nm (IP 67)
Materials	Housing, Flange : Aluminium Shaft : Stainless steel
Shaft diameter:	10 mm (other diameters on request)
Bearings lifetime:	$2x10^9$ rev. at 100% of full rated shaft load (minimum)
Operating temperature	-25...+90 °C
Weight approx.	300 g
Connection	Bus cover
Relative humidity	95 %
Resistance	DIN EN 60068-2-6 Vibration 30 g, 10-2000 Hz DIN EN 60068-2-27 Shock 200 g, 6 ms

Accessories

Connectors and cables
CRM2312R M23 12 poles female connector or see page 206

Mounting coupling
PF481010 metal coupling or see page 204

Mounting accessories
SF58B spring or see page 202-203

Mechanical Dimensions

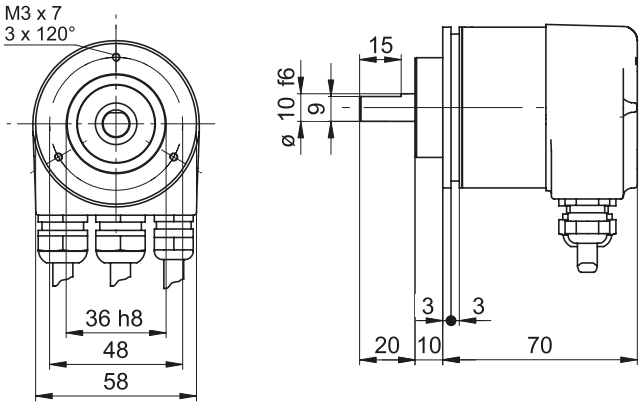

for details see page 114 - 115

Encoder Part Number

FNC | **A** | **C** | **O** | **58** | **B** | **10** | **S12** | **M00** | **30V** | **B** | **–** | **BCC**

Absolute

C: CanOpen **PR:** Profibus

O: Optic **M :** Magnetic

Housing:
58 : 58mm

Flange Type:
S : Servo flange
B : Clamping flange

Shaft diameter : 6, 8, 10
Other dimensions on request

Electrical Connections:
BCC : Bus Cover Cable
BCM : Bus Cover M12 4pin Socket

B: Binary

Supply Voltage:
5V : 5V in / out
30V : 5-30V in / out

M00 : Multiturn
Single turn : 00
Multi turn options : 4, 8, 12, 16, 20, 24, 32

S : Single Turn
12...19 bit options

Absolute encoders - Modular bus covers

Solid shaft with synchro flange
Magnetic single or multiturn encoders

FNC AC 58S Bus Cover Series

Canopen & Profibus

Features

- **Encoder single- or multiturn / bus cover**
- **Magnetic sensing**
- **Single turn Resolution: 12...19 bit**
- **Multi turn 4...32bit**
- **Clamping flange or synchro flange**
- **Permanent check of code continuity**
- **Extreme resistance to shock and vibration**
- **Modular fieldbus interfaces**
- **Profibus / CANopen® /**

Technical data - electrical ratings

Voltage supply	5.5VDC to 30VDC 4.75VDC to 5.5VDC 8VDC to 30VDC
Protection:	Output short circuit protection. Reverse polarity protection
Consumption w/o load	≤50 mA (24 VDC)
Initializing time typ.	170 ms after power on
Interface	Profibus / CANopen® /
Resolution (steps/turn)	9 to 16 bit
Number of revolution	4, 8, 12, 16, 24, 32,
Code	Binary
Code sequence	CW default, programmable
Absolute accuracy	±0,35°
Device adress	Rotary switch in bus cover
Interference immunity	DIN EN 61000-6-2
Emitted interference	DIN EN 61000-6-4
Approval	CE
Programmable parameters	Steps per revolution Number of revolutions Preset Scaling Rotating direction
Diagnostic functions	Position or parameter error Multiturn sensing
Status indicator	RED&GREEN-LED integrated in bus cover

Technical data - mechanical design

Dimensions (flange)	ø58 mm
Shaft loading	≤140 N axial ≤240 N radial
Protection DIN EN 60529	IP54, IP65
Operating speed	≤10000 rpm
Starting torque	≤0.025 Nm (IP 67)
Materials	Housing, Flange : Aluminium Shaft : Stainless steel
Shaft diameter:	6, 8 mm (other diameters on request)
Bearings lifetime:	$2x10^9$ rev. at 100% of full rated shaft load (minimum)
Operating temperature	-25...+90 °C
Weight approx.	400 g
Connection	Bus cover
Relative humidity	95 %
Resistance	DIN EN 60068-2-6 Vibration 30 g, 10-2000 Hz DIN EN 60068-2-27 Shock 200 g, 6 ms

Accessories

Connectors and cables
CRM2312R M23 12 poles female connector or see page 206

Mounting coupling
PF260606 metal coupling or see page 204

Mounting accessories
YY ASTK spring or see page 202-203

FNC AC 58S Bus Cover Series

Mechanical Dimensions

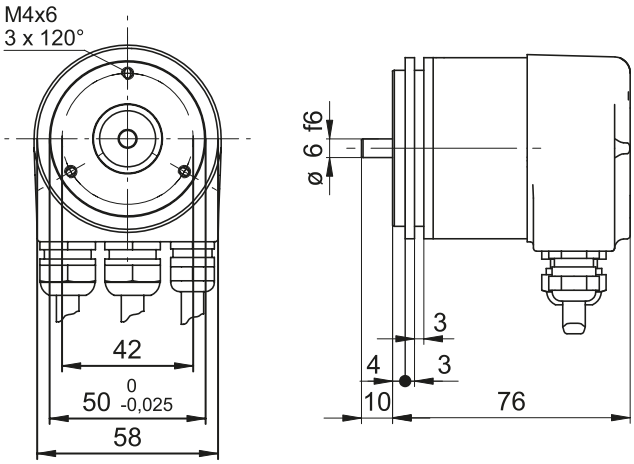

for details see page 114 - 115

Encoder Part Number

FNC | **A** | **PR** | **O** | **58** | **S** | **10** | **S12** | **M00** | **30V** | **B** | **–** | **BCC**

Absolute

C: CanOpen **PR:** Profibus

O: Optic **M :** Magnetic

Housing:
58 : 58mm

Flange Type:
S : Servo flange
B : Clamping flange

Shaft diameter : 6, 8, 10
Other dimensions on request

Electrical Connections:
BCC : Bus Cover Cable
BCM : Bus Cover M12 4pin Socket

B: Binary

Supply Voltage:
5V : 5V in / out
30V : 5-30V in / out

M00 : Multiturn
Single turn : 00
Multi turn options : 4, 8, 12, 16, 20, 24, 32

S : Single Turn
12...19 bit options

FNC AC 58E Bus Cover Series

Canopen & Profibus

Features

- **Encoder single- or multiturn / bus cover**
- **Magnetic sensing**
- **Single turn Resolution: 12...19 bit**
- **Multi turn 4...32bit**
- **End Hollow Shaft**
- **Permanent check of code continuity**
- **Extreme resistance to shock and vibration**
- **Modular fieldbus interfaces**
- **Profibus / CANopen®**

Technical data - electrical ratings

Voltage supply	5.5VDC to 30VDC 4.75VDC to 5.5VDC 8VDC to 30VDC
Protection:	Output short circuit protection. Reverse polarity protection
Consumption w/o load	≤50 mA (24 VDC)
Initializing time typ.	170 ms after power on
Interface	Profibus / CANopen® /
Resolution (steps/turn)	9 to 16 bit
Number of revolution	4, 8, 12, 16, 24, 32,
Code	Binary
Code sequence	CW default, programmable
Absolute accuracy	±0,35°
Device adress	Rotary switch in bus cover
Interference immunity	DIN EN 61000-6-2
Emitted interference	DIN EN 61000-6-4
Approval	CE
Programmable parameters	Steps per revolution Number of revolutions Preset Scaling Rotating direction
Diagnostic functions	Position or parameter error Multiturn sensing
Status indicator	RED&GREEN-LED integrated in bus cover

Technical data - mechanical design

Dimensions (flange)	ø58 mm
Shaft loading	≤140 N axial ≤240 N radial
Protection DIN EN 60529	IP54, IP65
Operating speed	≤10000 rpm
Starting torque	≤0.025 Nm (IP 67)
Materials	Housing, Flange : Aluminium Shaft : Stainless steel
Shaft diameter:	6, 8 mm (other diameters on request)
Bearings lifetime:	$2x10^9$ rev. at 100% of full rated shaft load (minimum)
Operating temperature	-25...+90 °C
Weight approx.	300 g
Connection	Bus cover
Relative humidity	95 %
Resistance	DIN EN 60068-2-6 Vibration 30 g, 10-2000 Hz DIN EN 60068-2-27 Shock 200 g, 6 ms

Accessories

Connectors and cables
CRM2312R M23 12 poles female connector or see page 206

Mounting coupling
See page 204

Mounting accessories
YY TEO spring or see page 202-203

FNC AC 58E Bus Cover Series

Mechanical Dimensions

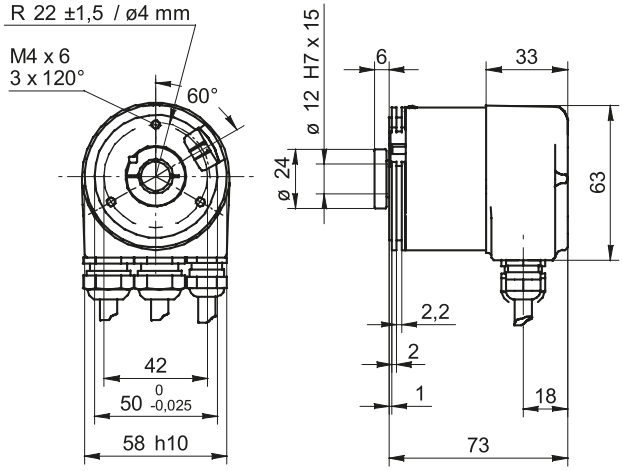

for details see page 114 - 115

Encoder Part Number

FNC | **A** | **C** | **O** | **58** | **E** | **10** | **S12** | **M00** | **30V** | **B** | **–** | **BCC**

Absolute

C: CanOpen **PR:** Profibus

O: Optic **M :** Magnetic

Housing:
58 : 58mm

Flange Type:
E : End Hollow Shaft

Shaft diameter : 6, 8, 10
Other dimensions on request

Electrical Connections:
BCC : Bus Cover Cable
BCM : Bus Cover M12 4pin Socket

B: Binary

Supply Voltage:
5V : 5V in / out
30V : 5-30V in / out

M00 : Multiturn
Single turn : 00
Multi turn options : 4, 8, 12, 16, 20, 24, 32

S : Single Turn
12...19 bit options

Shaft / end shaft encoders

Accessories

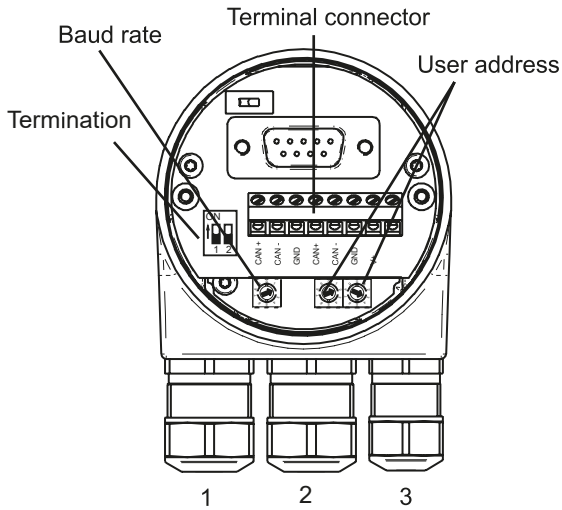

Cable: 1, 2 = ø8-10 mm (-40-85 °C) / ø5-9 mm (-25-85 °C)
Cable: 3 = ø4.5-6 mm (-40-85 °C) / ø3-6 mm (-25-85 °C)

Features - CANopen®

Bus protocol	CANopen®
Device profile	CANopen® - CiA DSP 406, V 3.1 (Device Class 2, CAN 2.0A)
Operating mode	Event-triggered Time-triggered Remotely-requested Sync (cyclic) Sync (acyclic)
Preset	Parameter for setting the encoder to a requested position value assigned to a defined shaft position of the system. The offset of encoder zero point and mechanical zero point is stored in the encoder.
Rotating direction	Parameter for defining the rotating direction in which there have to be ascending or descending position values.
Scaling	Parameter defining the steps per turn as well as the total resolution.
Diagnosis	The encoder supports the following error warnings: - Position and parameter error - Lithium battery voltage control (Multiturn)
Node ID monitoring	Heartbeat or Nodeguarding
Default	125 kbit/s, Node ID 1

Termination

ON = final user
OFF = user X

Bus cover

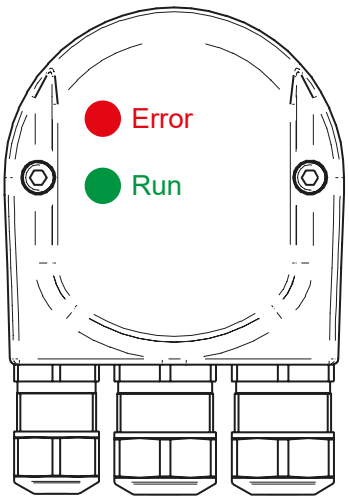

Terminal assignment

Pin 1	GND	Ground connection relating to UB
Pin 2	UB	Voltage supply 10...30 VDC
Pin 3	GND	Ground connection relating to UB
Pin 4	CAN_H	CAN bus signal (dominant High)
Pin 5	CAN_L	CAN bus signal (dominant Low)

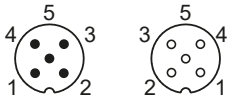

Connector M12 (male / female)
A-coded

User address (identifier)

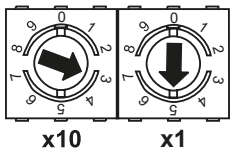

Defined by rotary switch.
Example: User address 35

Baud rate

Switch	Baud rate
0	EEPROM Value
1	10 kbps
2	20 kbps
3	50 kbps
4	100 kbps
5	125 kbps
6	250 kbps
7	500 kbps
8	800 kbps
9	1000 kbps

Shaft / end shaft encoders

View inside bus cover

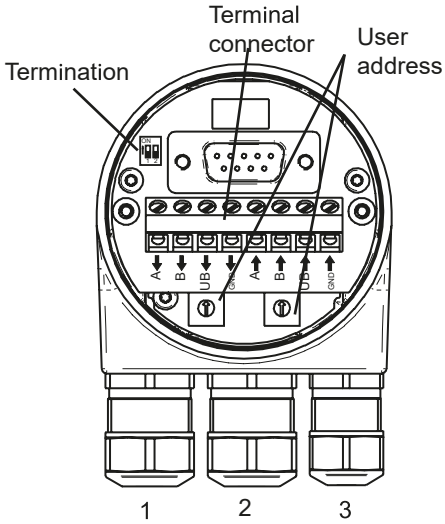

Cable: 1, 2 = ø8-10 mm (-40-85 °C) / ø5-9 mm (-25-85 °C)
Cable: 3 = ø4.5-6 mm (-40-85 °C) / ø3-6 mm (-25-85 °C)

Bus cover

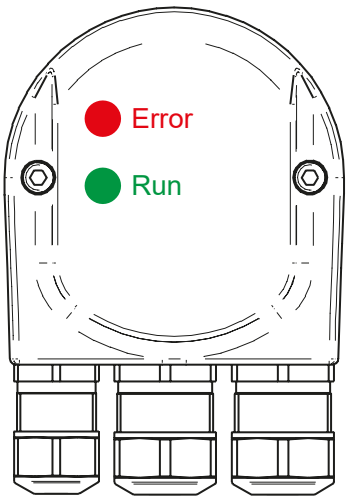

Features - Profibus-DPV0

Bus protocol	Profibus-DPV0
Device profile	Device Class 1 and 2
Cyclic data exchange	Communication in line with DPV0
Input data	Position value. In addition optionally speed signal parametering (output of current rotation speed).
Output data	Preset
Preset	Parameter for setting the encoder to a requested position value assigned to a defined shaft position of the system. Storage non-volatile.
Rotating direction	Parameter for defining the rotating direction in which there have to be ascending or descending position values.
Scaling	Parameter defining the steps per turn as well as the total resolution.
Diagnosis	The encoder supports the following error warnings: - Position and parameter error - Lithium battery voltage control (Multiturn)
Default	User address 00 Termination OFF

Terminal assignment

Connector M12 (male), A-coded

Pin 1	UB	Voltage supply 10...30 VDC
Pin 3	GND	Ground connection relating to UB

Connector M12 (male / female), B-coded

Pin 2	A	Negative data line
Pin 4	B	Positive data line

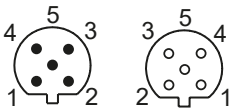

Terminals of the same significance are internally connected and identical in their functions. Max. load on the internal terminal connections UB-UB and GND-GND is 1 A each.

Termination

both ON = final user
both OFF = user X

User address (identifier)

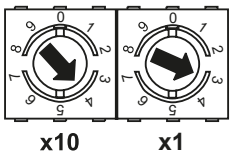

Defined by rotary switch.
Example: User address 43

ENCOD 40E 865P
PPR : 2500
VCC : 5VDC
PP : 5P
869 23F155G

FENAC Automation Control

Motor feedback encoders

- Quick
- Smooth

Motion Control Products

F08IM Series Encoder

Features

- Compact miniature design
- A, B, Z incremental signal output
- Differential RS 422 incremental output signals
- Super small non-contact magnetic technology
- 8 mm diameter body

Technical data - electrical ratings

Voltage supply	5VDC ± %5
Interface	ABZ; Line Driver RS422
Resolution (steps/turn)	up to 4096 CPR

Technical data - mechanical design

Dimensions	8 mm
Materials	Housing : Aluminium
Magnet	4x4 mm NdFeB
Wire thickness	AWG28

Connections

Function	Color	Renk	Explanation
+5V	Brown	Kahve	Supply Voltage
GND	White	Beyaz	Ground
A	Green	Yeşil	A Channel
B	Yellow	Sarı	B Channel
Z	Gray	Gri	Z Channel
Shield	Black	Siyah	Shield

Pulse Diagram

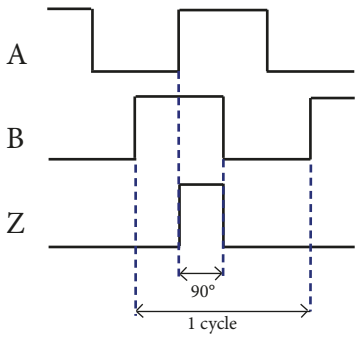

B leads A for CW rotation of magnet

Mechanical Dimensions

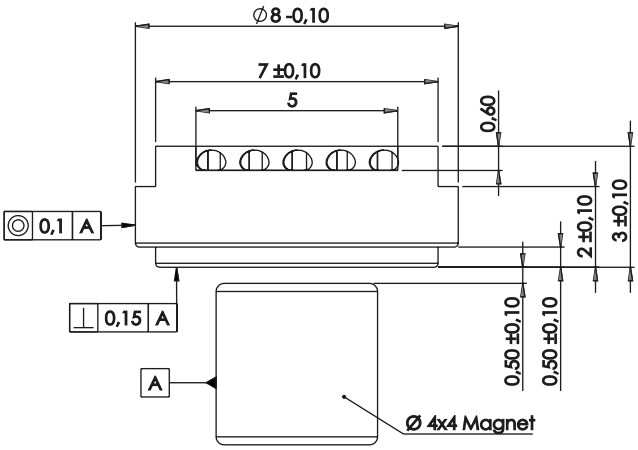

Encoder Part Number

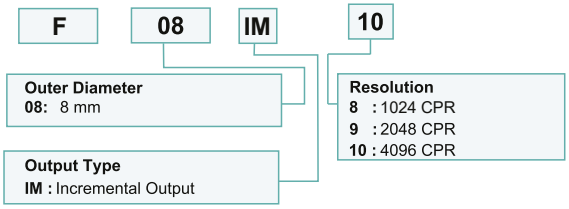

F08AS Series Encoder

Features

- Compact miniature design
- BISS interface with error/warning and CRC bits
- Differential absolute output signals
- Super small non-contact magnetic technology
- 8 mm diameter body

Technical data - electrical ratings

Voltage supply	5VDC ± %5
Interface	SSI or BISS
Resolution (steps/turn)	up to 14 bit

Technical data - mechanical design

Dimensions	8 mm
Materials	Housing : Aluminium
Magnet	4x4 mm NdFeB
Wire thickness	AWG28

Connections

Function	Color	Renk	Explanation
+5V	Brown	Kahve	Supply Voltage
GND	White	Beyaz	Ground
D+	Orange	Turuncu	Data+
D-	Pink	Pembe	Data-
C+	Blue	Mavi	Clock+
C-	Gray	Gri	Clock-

Timing Diagram

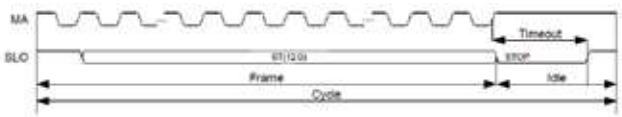

Clock frequency, f	50...2000 kHz for SSI up to 10MHz for BISS
Code	Binary or gray
Status and parity bit	On request
Monoflop time tm	>15µs
Clock time out	Programmable at factory

Mechanical Dimensions

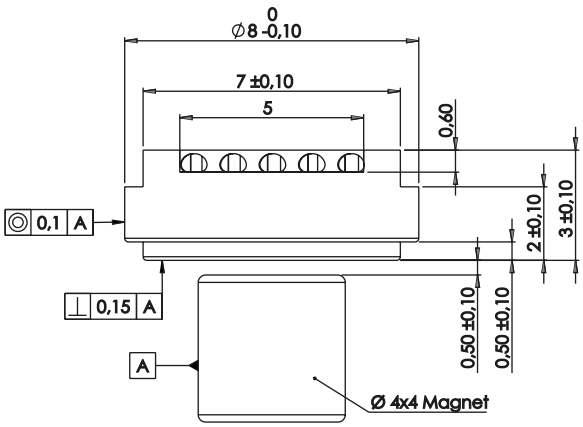

Encoder Part Number

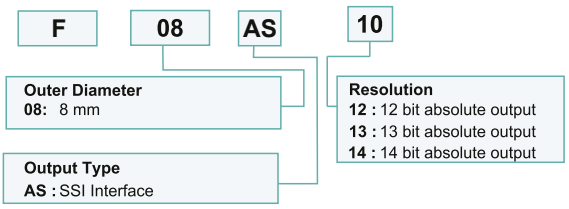

F10 Series Encoder

Features

- Compact miniature design
- A, B, Z incremental signal output
- Differential RS 422 incremental output signals
- Super small non-contact magnetic technology
- 16 mm diameter body

Technical data - electrical ratings

Voltage supply	5VDC ± %5
Interface	ABZ; Line Driver RS422
Resolution (steps/turn)	up to 4096 CPR

Technical data - mechanical design

Dimensions	16 mm
Materials	Housing : Aluminium
Magnet	4x4 mm NdFeB
Wire thickness	AWG28

Connections

Function	Color	Renk	Explanation
+5V	Brown	Kahve	Supply Voltage
GND	White	Beyaz	Ground
A	Green	Yeşil	A Channel
B	Red	Sarı	B Channel
Z	Yellow	Gri	Z Channel
Shield	Pink	Siyah	Shield

Pulse Diagram

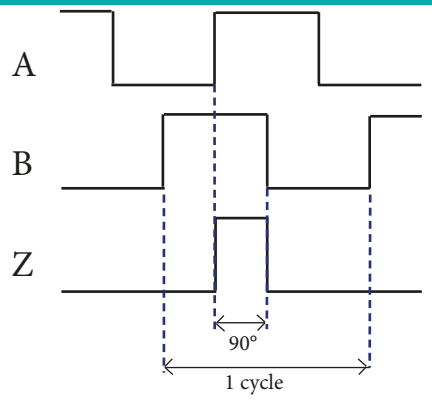

B leads A for CW rotation of magnet

Mechanical Dimensions

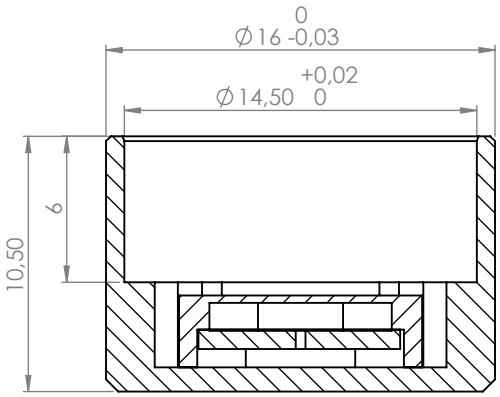

Encoder Part Number

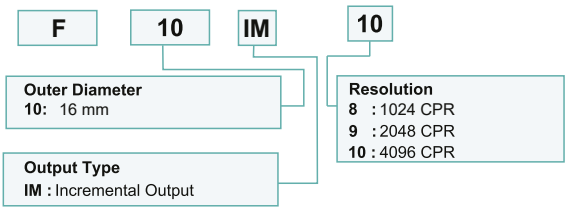

FNC 35i Series

Features

- Semi hollow shaft, hollow shaft options
- Robust mechanical and electrical construction
- Differential RS 422 output signals
- Shaft can mount from front or back side with setscrew
- Thin design

Technical data - Mechanical Ratings

Dimensions:	35 mm
Shaft Diameter:	4, 6 mm
Materials:	Housing: Aluminium Cover : ABS

Technical data - Electrical Ratings

Supply Voltage:	5V DC ±%5
Interface:	Line Driver RS422
Protection:	Overvoltage protection Short-circuit protection
Resolution (steps/turn):	500-512-1000-2000-2048
Output frequency:	up to 200 kHz
Output Signals:	90° shifted A and B, and inverted A and B

Cable Wiring

Function	Color	Renk	Explanation
+VB	Brown	Kahve	Supply Voltage
GND	White	Beyaz	Ground
A	Green	Yeşil	A Channel
A'	Red	Kırmızı	A Inverted Channel
B	Yellow	Sarı	B Channel
B'	Pink	Pembe	B Inverted Channel
Z	Gray	Gri	Z Channel
Z'	Blue	Mavi	Z Inverted Channel
Shield	Black	Siyah	Shield

Pulse Diagram

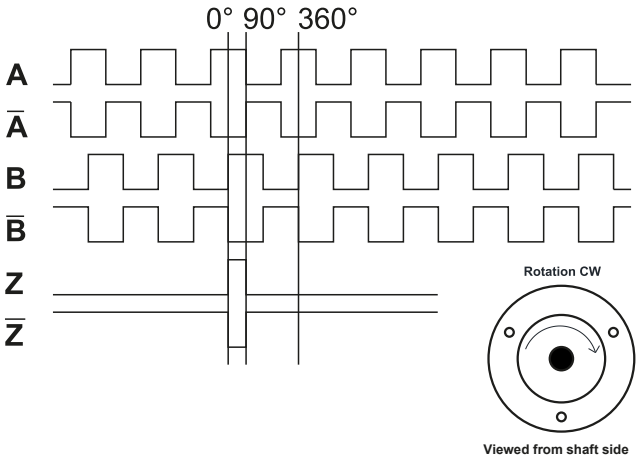

Mechanical Diamensions

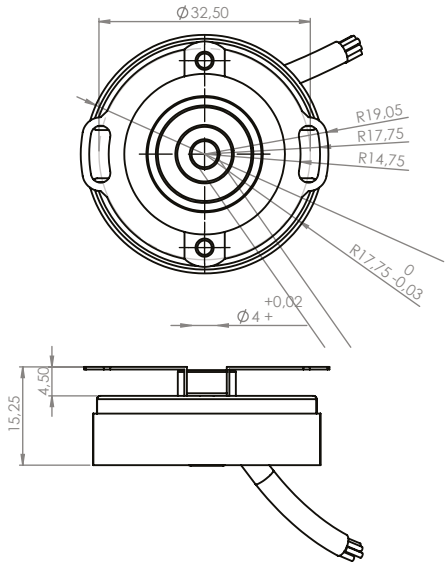

Encoder Part Number

FNC	35	i	–	FL

Mount Options
FL : Shaft setscrew from font side, long spring

FNC F16 Series

Features

- **Designed for motor feedback applications**
- **Both A, B, Z incremental and U, V, W commutation signals**
- **Diffrential RS 422 incremental output signals.**
- **Non-contact magnetic technology**
- **16 mm diameter body**

Technical data - electr cal rat ngs

Voltage supply	5VDC ± %5
Interface	ABZ ; Line Driver RS422 UVW ; (±24 mA output drive)
Resolution (steps/turn) :	up to 4096 CPR
Commutation Signals :	up to 16 pole

Technical data - mechanical design

Dimensions	ø16 mm
Mount Diameter	21 mm
Materials	Housing: Aluminium Cover: Aluminium
Magnet actuator	for integration into 3 mm shaft

Installation Guide

Zero the UVW signals

First move the motor to the required zero UVW position. Short together the two zeroing pads.

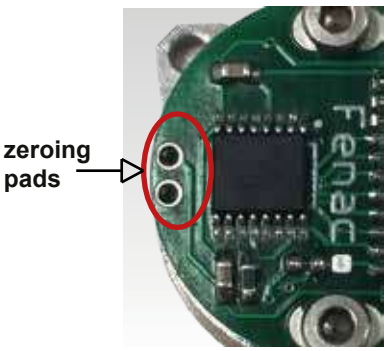

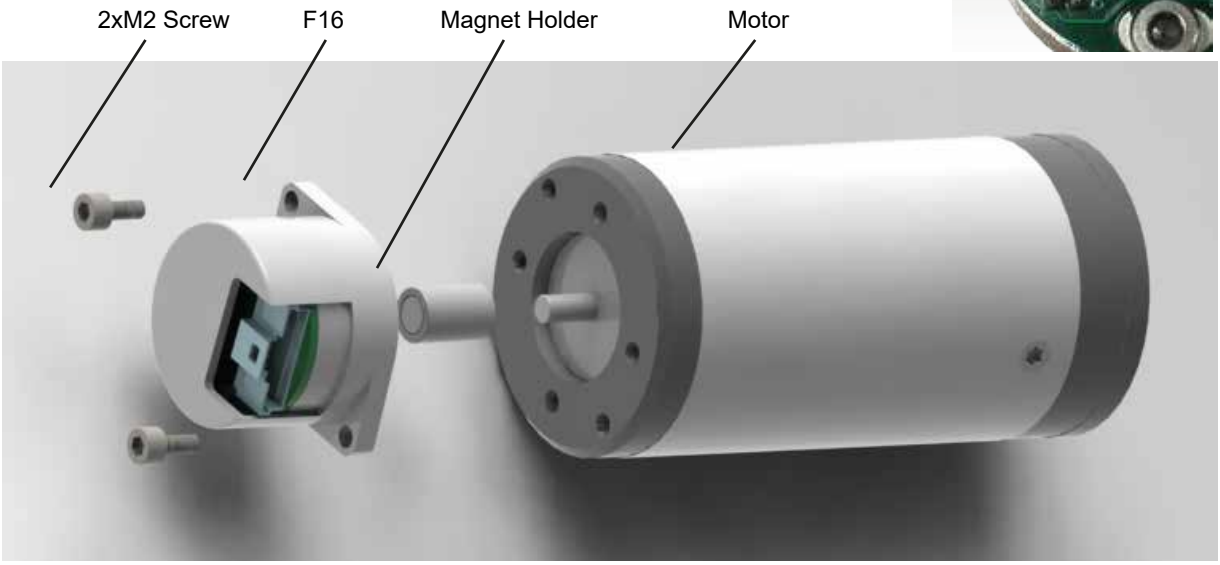

Mechanical Dimensions

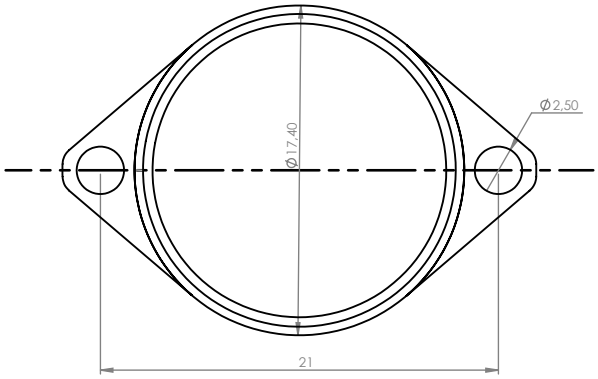

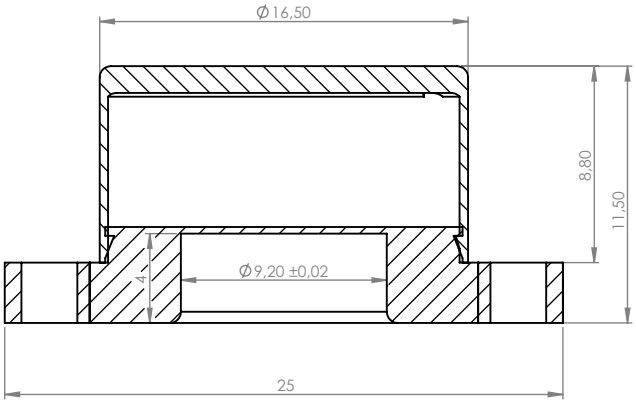

F22M4403 / F22M4404

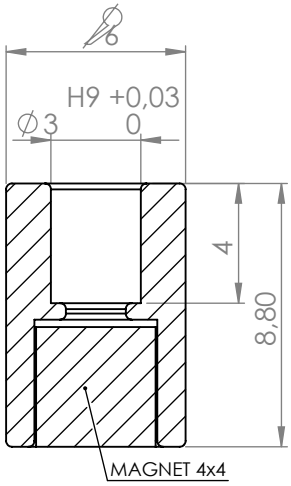

Pulse Diagram

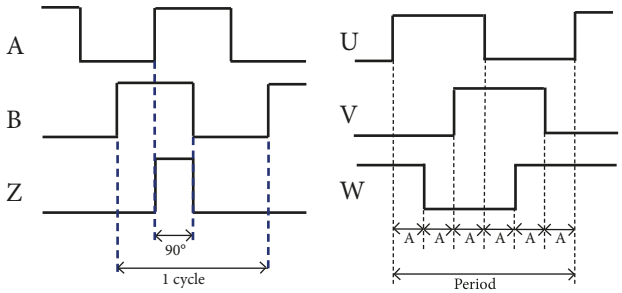

Encoder Part Number

Commutation Version with Preset

F | 16 | K | A | 7 | C

Outer Diameter
16 : 16 mm

Mounting Type
K : Ear Flange

Commutation Signals
A : 2 pole
B : 4 pole
C : 6 pole
D : 8 pole
E : 10 pole
F : 12 pole
G : 14 pole
H : 16 pole

Resolution
7 : 128 ppr / 512 cpr
8 : 256 ppr / 1024 cpr
9 : 512 ppr / 2048 cpr
10 : 1024 ppr / 4096 cpr

Connection Options
C : Cable
M * : Molex 501568-1107 Connector
* (mating with Molex 501330 -1100)

Commutation Version without Preset

F | 16 | K | A | 4096 | C

Outer Diameter
16 : 16 mm

Mounting Type
K : Ear Flange

Commutation Signals
X : without commutation signal
A : 2 pole
B : 4 pole
C : 6 pole
D : 8 pole
E : 10 pole
F : 12 pole
G : 14 pole
H : 16 pole

Resolution
4096 : up to 4096 ppr

Connection Options
C : Cable
M * : Molex 501568-1107 Connector
* (mating with Molex 501330 -1100)

Magnet Holder

F | 22 | M | 44 | 03

03 : 3 mm
04 : 4 mm

FNC F22 Series

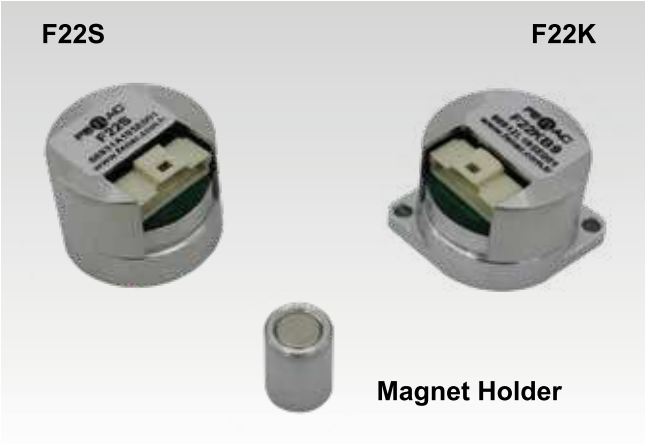

Features

- **Designed for motor feedback applications**
- **Both A, B, Z incremental and U, V, W commutation signals**
- **Differential RS 422 incremental output signals.**
- **Non-contact magnetic technology**
- **22 mm diameter body**

Technical data - electrical ratings

Voltage supply	5VDC ± %5
Interface	ABZ ; Line Driver RS422 UVW ; (±24 mA output drive)
Resolution (steps/turn) :	up to 4096 CPR
Commutatiton Signals :	up to 16 pole

Technical data - mechanical design

Dimensions	ø22 mm
Mount Diameter	26 mm
Materials	Housing: Aluminium Cover: Aluminium
Magnet actuator	for integration into 3 mm shaft

Installation Guide

Zero the UVW signals

First move the motor to the required zero UVW position. Short together the two zeroing pads.

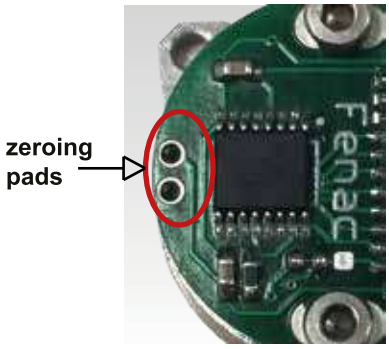

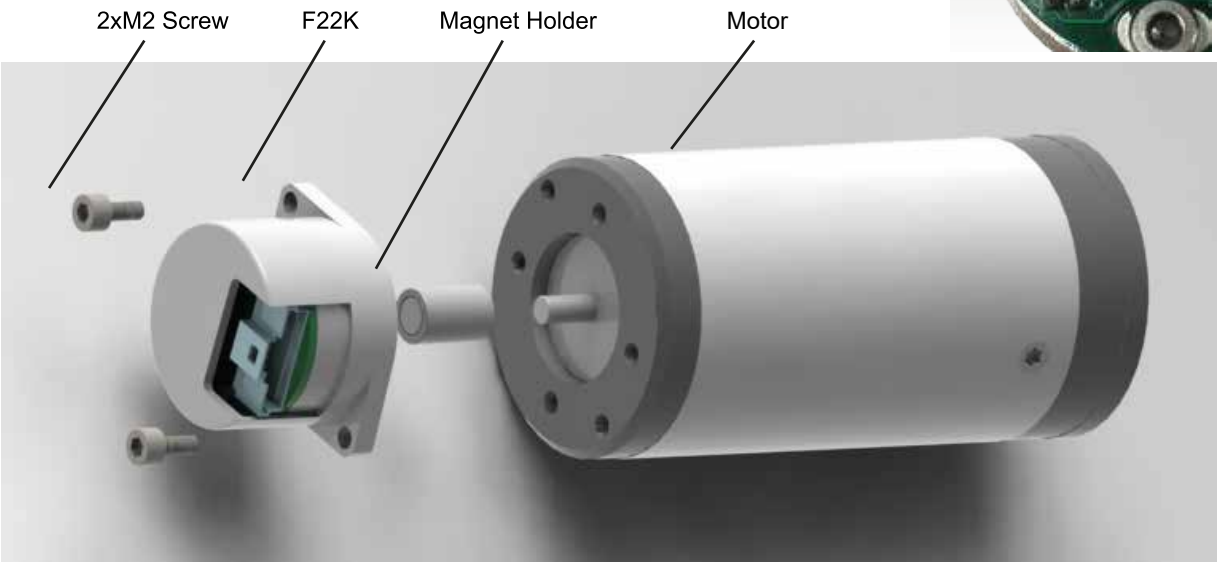

FNC F22 Series

Mechanical Dimensions

F22S

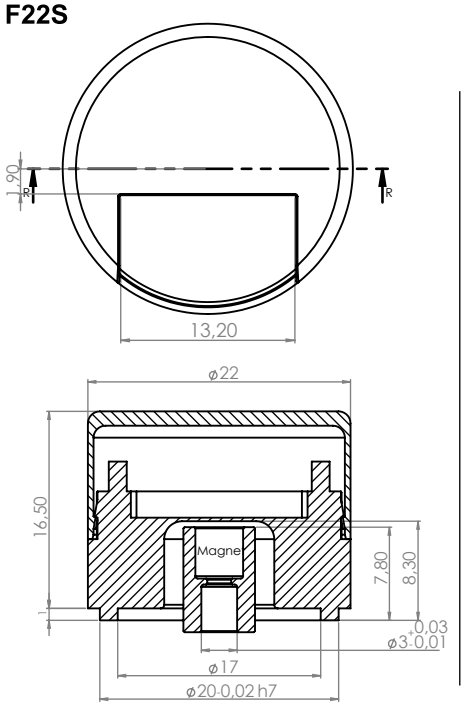

F22K

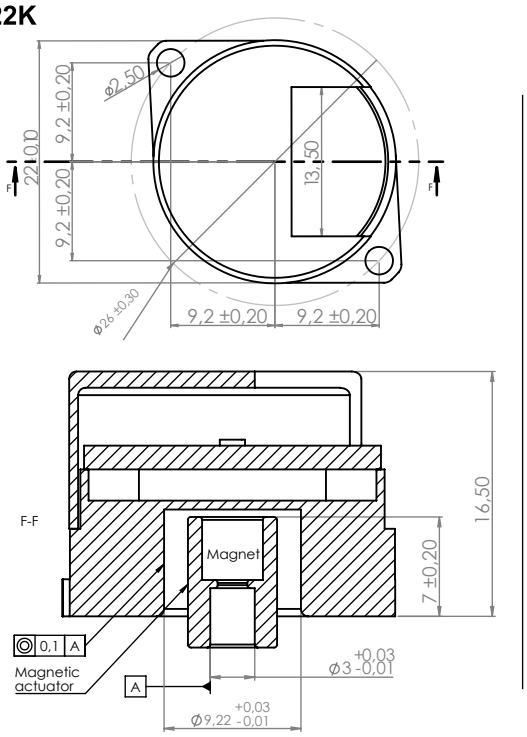

F22M4403 / F22M4404

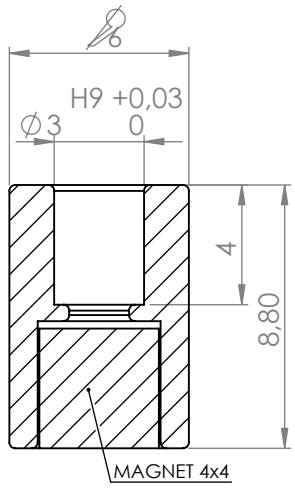

Connection

Please consult the factory.

Pulse Diagram

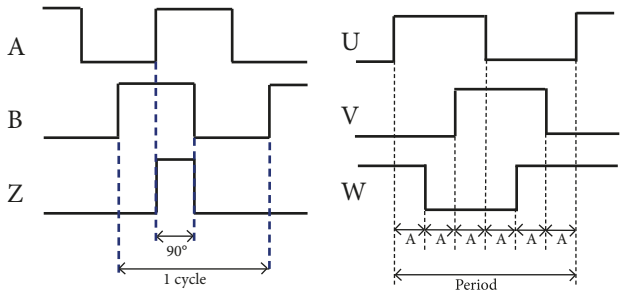

B leads A for CW rotation

Encoder Part Number

Commutation Version

F	22	K	A	7	C

Outer Diameter
22 : 22 mm

Mounting Type
K : Ear Flange
S : Servo Flange

Commutation Signals
A : 2 pole
B : 4 pole
C : 6 pole
D : 8 pole
E : 10 pole
F : 12 pole
G : 14 pole
H : 16 pole

Connection Options
C : Cable
M * : Molex 501568-1107 Connector
* (mating with Molex 501330 -1100)

Resolution
7 : 128 ppr / 512 cpr
8 : 256 ppr / 1024 cpr
9 : 512 ppr / 2048 cpr
10 : 1024 ppr / 4096 cpr

Incremental Version

F	22	K	A	4096	C

Outer Diameter
22 : 22 mm

Mounting Type
K : Ear Flange
S : Servo Flange

Commutation Signals
X : without commutation signal
A : 2 pole
B : 4 pole
C : 6 pole
D : 8 pole
E : 10 pole
F : 12 pole
G : 14 pole
H : 16 pole

Connection Options
C : Cable
M * : Molex 501568-1107 Connector
* (mating with Molex 501330 -1100)

Resolution
4096 : up to 4096 ppr

Magnet Holder

F	22	M	44	03

03 : 3 mm
04 : 4 mm

Absolute commutation encoders

Resolution 1...5000 pulses

FNCC 40EF Series

without cover

with cover

Features

- **Industry 40 mm, end or through hollow shaft**
- **Robust Mechanical and Electrical Construction**
- **Protection up to IP67**
- **Up to 5000 PPR max.**
- **2P, 3P, 4P, 5P Pole pairs options**

PPR Options :

1000 - 1024 - 1250 - 2000 - 2048 - 2500 - 5000

Technical data - electrical ratings

Voltage supply	4.75VDC to 30VDC 4.75VDC to 5.5VDC
Protection:	Output short circuit protection. Reverse polarity protection (except 5V version)
Consumption w/o load	≤60 mA (24 VDC)
Resolution (steps/turn)	1...5000
Reference signal	Zero pulse, width 90° 180°, 360° optional
Optoelectronic life time	100.000 (min)
Output frequency	>200 kHz
Output signals	90° shifted A and B, Z + inverted
Output circuit	Linedriver/RS422 Push-pull short-circuit proof
Interference immunity	DIN EN 61000-6-2
Emitted interference	DIN EN 61000-6-4
Approval	CE

Technical data - mechanical design

Dimensions (flange)	ø40 mm
Shaft loading	≤80 N axial ≤100 N radial
Protection DIN EN 60529	IP 67
Operating speed	≤10000 rpm
Starting torque	≤0.025 Nm (IP 67)
Materials	Housing: Aluminium Flange: Aluminium Shaft : Stainless steel
Shaft diameter:	4, 5, 6, 7, 8 mm (other diameters on request)
Bearings lifetime:	$2x10^9$ rev. at 100% of full rated shaft load (minimum)
Operating temperature	-20...+85 °C
Storage temperature	-30 °C up to +90 °C
Weight approx.	250 g

Accessories

Connectors and cables
See page 206

Mounting coupling
See page 204

Mounting accessories
See page 202-203

Mechanical Dimensions

With cover

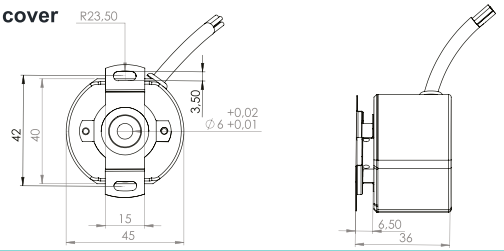

Without cover

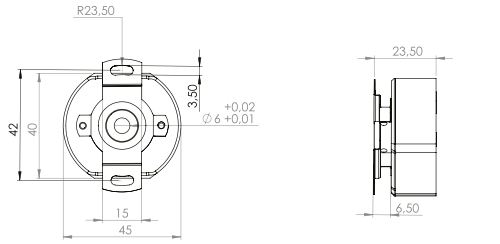

Pulse Diagram

Clockwise rotating direction when looking at flange.

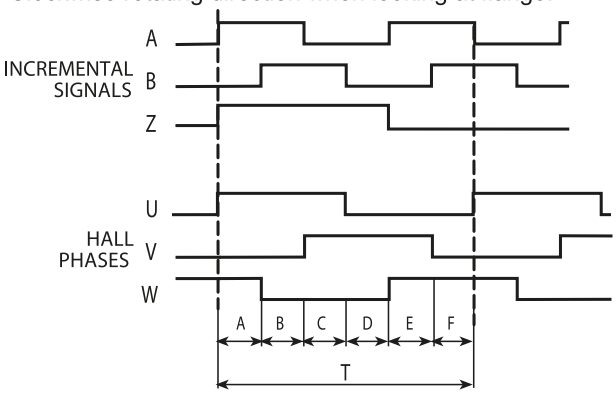

Cable / Connector Wiring

Function	Connector	Color	Renk
+VB	pin 1	Brown	Kahve
GND	pin 2	White	Beyaz
A	pin 3	Green	Yeşil
A'	pin 4	Green-Black	Yeşil-Siyah
B	pin 5	Yellow	Sarı
B'	pin 6	Yellow-Black	Sarı-Siyah
Z	pin 7	Gray	Gri
Z'	pin 8	Gray-Black	Gri-Siyah
U	pin 9	Blue	Mavi
U'	pin 10	Blue-Black	Mavi-Siyah
V	pin 11	Orange	Turuncu
V'	pin 12	Orange-Black	Turuncu-Siyah
W	pin 13	Red	Kırmızı
W'	pin 14	Red-Black	Kırmızı-Siyah
shield	pin 15		

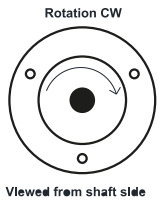

POLES	A / B / C / D / E / F	T
4	30° ±1,5°	180°
6	20° ±1,5°	120°
8	15° ±1,5°	90°
10	12° ±1,5°	72°

Encoder Part Number

FNCC 40 EF 8 6 8P 2500 30V – R2

Housing:
40 : 40mm

Flange Type:
EF : End hollow shaft optic
EFM : End hollow shaft magnetic

Shaft diameter : 4, 5, 6, 7, 8 mm
Other dimensions on request

Output Channels
3 : ABZ
6 : ABZ+A' B' Z'

Cable
R2 : Radial 2 mm, Standard ,without cover
R2C : Radial 2m, With cover

Supply Voltage and output circuit :
5V : 5V in / out
245V : 5-30V in 5V out
30V : 5-30V in / out

PPR Options :
1000 - 1024 - 1250 - 2000 - 2048 - 2500 - 4096 - 5000

Pole pairs
4P : 4 poles, 2 pole pair
6P : 6 poles, 3 pole pair
8P : 8 poles, 4 pole pair
2P : 2 poles, 1 pole pair
10P : 10 poles, 5 pole pair
12P : 12 poles, 6 pole pair

FNCC 40HF Series

Features

- Industry 40 mm, end or through hollow shaft
- Robust Mechanical and Electrical Construction
- Protection up to IP67
- Up to 65536 PPR max.
- 2P, 3P, 4P, 5P Pole pairs options

PPR Options :

1000 - 1024 - 1250 - 2000 - 2048 - 2500 - 5000

Technical data - electrical ratings

Voltage supply	4.75VDC to 30VDC 4.75VDC to 5.5VDC
Protection:	Reverse polarity protection (except 5V version)
Consumption w/o load	≤60 mA (24 VDC)
Resolution (steps/turn)	1...65536
Reference signal	Zero pulse, width 90° 180°, 360° optional
Optoelectronic life time	100.000 (min)
Output frequency	>200 kHz
Output signals	90° shifted A and B, Z + inverted
Output circuit	Linedriver/RS422 Push-pull short-circuit proof
Interference immunity	DIN EN 61000-6-2
Emitted interference	DIN EN 61000-6-4
Approval	CE

Technical data - mechanical design

Dimensions (flange)	ø40 mm
Shaft loading	≤80 N axial ≤100 N radial
Protection DIN EN 60529	IP 67
Operating speed	≤10000 rpm
Starting torque	≤0.025 Nm (IP 67)
Materials	Housing: Aluminium Flange: Aluminium Shaft : Stainless steel
Shaft diameter:	4, 5, 6, 7, 8 mm (other diameters on request)
Bearings lifetime:	$2x10^9$ rev. at 100% of full rated shaft load (minimum)
Operating temperature	-20...+85 °C
Storage temperature	-30 °C up to +90 °C
Weight approx.	250 g

Accessories

Connectors and cables
See page 206

Mounting coupling
See page 204

Mounting accessories
See page 202-203

FNCC 40HF Series

Mechanical Dimensions

With cover

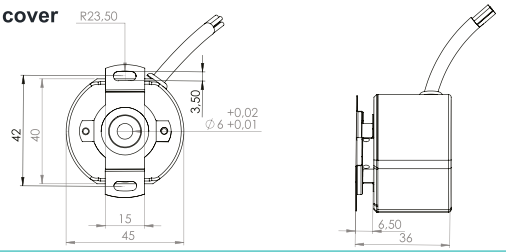

Without cover

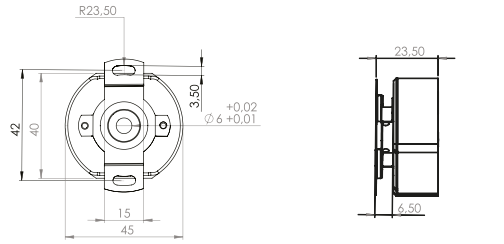

Pulse Diagram

Clockwise rotating direction when looking at flange.

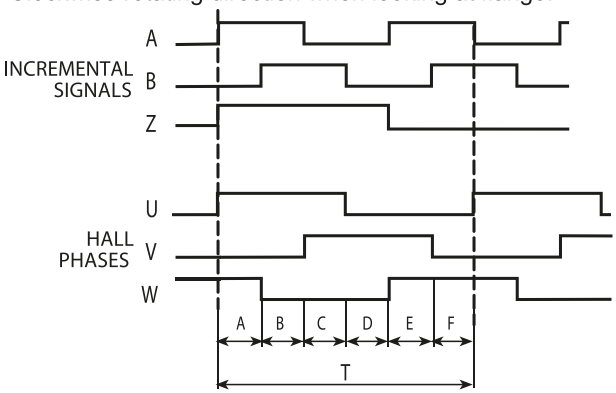

Cable / Connector Wiring

Function	Connector	Color	Renk
+VB	pin 1	Brown	Kahve
GND	pin 2	White	Beyaz
A	pin 3	Green	Yeşil
A'	pin 4	Green-Black	Yeşil-Siyah
B	pin 5	Yellow	Sarı
B'	pin 6	Yellow-Black	Sarı-Siyah
Z	pin 7	Gray	Gri
Z'	pin 8	Gray-Black	Gri-Siyah
U	pin 9	Blue	Mavi
U'	pin 10	Blue-Black	Mavi-Siyah
V	pin 11	Orange	Turuncu
V'	pin 12	Orange-Black	Turuncu-Siyah
W	pin 13	Red	Kırmızı
W'	pin 14	Red-Black	Kırmızı-Siyah
shield	pin 15		

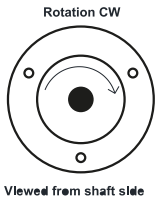

POLES	A / B / C / D / E / F	T
4	30° ±1,5°	180°
6	20° ±1,5°	120°
8	15° ±1,5°	90°

Encoder Part Number

FNCC	40	HF	8	6	8P	2500	30V	–	R2

Housing:
40 : 40mm

Flange Type:
HF: Through hollow shaft optic

Shaft diameter : 4, 5, 6, 7, 8 mm
Other dimensions on request

Output Channels
3 : ABZ
6 : ABZ + A' B' Z'
: ABZ + UVW
12 : ABZ + A'B'Z' + UVW + U' V' W'

Cable
R2 : radial 2m, shield not connected (standart)

Supply Voltage and output circuit :
5V : 5V in / out
245V : 5-30V in 5V out
30V : 5-30V in / out

PPR Options :
1000 - 1024 - 1250 - 2000 - 2048 - 2500 - 4096 - 5000 - 65536

Pole pairs
0P : No poles, 0 pole pair
4P : 4 poles, 2 pole pair
8P : 8 poles, 4 pole pair
12P : 12 poles, 6 pole pair
16P : 16 poles, 8 pole pair
2P : 2 poles, 1 pole pair
6P : 6 poles, 3 pole pair
10P : 10 poles, 5 pole pair
14P : 14 poles, 7 pole pair
32P : 32 poles, 16 pole pair

FNCC 40HFS Serial Motor Feedback Encoder

without cover

with cover

Features

- **Industry 40 mm, end or through hollow shaft**
- **Robust Mechanical and Electrical Construction**
- **Protection up to IP67**

Technical data - electrical ratings

Voltage supply	4.75VDC to 30VDC 4.75VDC to 5.5VDC
Protection:	Output short circuit protection. Reverse polarity protection (except 5V version)
Consumption w/o load	≤60 mA (24 VDC)
Resolution (steps/turn)	1...5000
Reference signal	Zero pulse, width 90° 180°, 360° optional
Optoelectronic life time	100.000 (min)
Output frequency	>200 kHz
Output signals	90° shifted A and B, Z + inverted
Output circuit	Linedriver/RS422 Push-pull short-circuit proof
Interference immunity	DIN EN 61000-6-2
Emitted interference	DIN EN 61000-6-4
Approval	CE

Technical data - mechanical design

Dimensions (flange)	ø40 mm
Shaft loading	≤80 N axial ≤100 N radial
Protection DIN EN 60529	IP 67
Operating speed	≤10000 rpm
Starting torque	≤0.025 Nm (IP 67)
Materials	Housing: Aluminium Flange: Aluminium Shaft : Stainless steel
Shaft diameter:	4, 5, 6, 7, 8 mm (other diameters on request)
Bearings lifetime:	$2x10^9$ rev. at 100% of full rated shaft load (minimum)
Operating temperature	-20...+85 °C
Storage temperature	-30 °C up to +90 °C
Weight approx.	250 g

Accessories

Connectors and cables
See page 206

Mounting coupling
See page 204

Mounting accessories
See page 202-203

FNCC 40HFS Serial Motor Feedback Encoder

Mechanical Dimensions

With cover

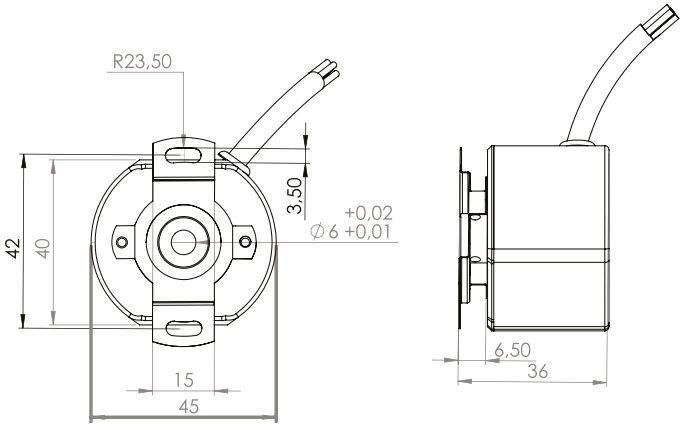

Without cover

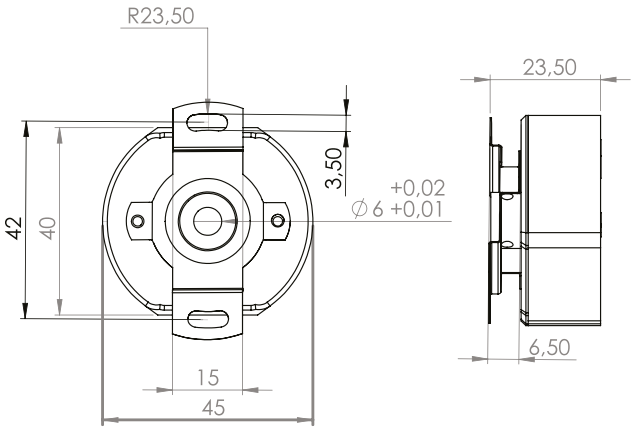

Pulse Diagram

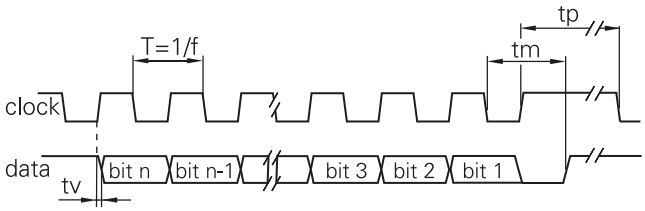

Clock frequency, f	50...2000 kHz for SSI up to 10MHz for BISS
Code	Binary or gray
Status and parity bit	On request
Monoflop time tm	>15µs
Clock time out	Programmable at factory

Cable / Connector Wiring

Connector	Core colour	Signals	Description
Pin 1	blue	Clock+	Clock signal
Pin 2	blue-black	Clock-	Clock signal
Pin 3	orange	Data+	Data signal
Pin 4	orange-black	Data-	Data signal
Pin 5	gray	Zero	Zero setting input
Pin 6,7,8,9	–	n.c.	–
Pin 10	gray-black	up/down	direction input
Pin 11	white	0 V	GND
Pin 12	brown	+Vs	Supply voltage
Screen: not connected to housing			
Cable data: 4 x 2 x 0.14 mm²			

Encoder Part Number

FNCC	40	HF	S	8	S16	30V	–	R2

Housing:
40 : 40mm

Flange Type:
HF: Through hollow shaft optic

S: SSI
B: BISS

Shaft diameter : 4, 5, 6, 7, 8 mm
Other dimensions on request

Cable
R2 : Radial 2 mm, Standard ,without cover
R2C : Radial 2m, With cover

Supply Voltage and output circuit :
5V : 5V in / out
245V : 5-30V in 5V out
30V : 5-30V in / out

Pole pairs
S : Single turn up to 21 bit

FNC MF36 Series

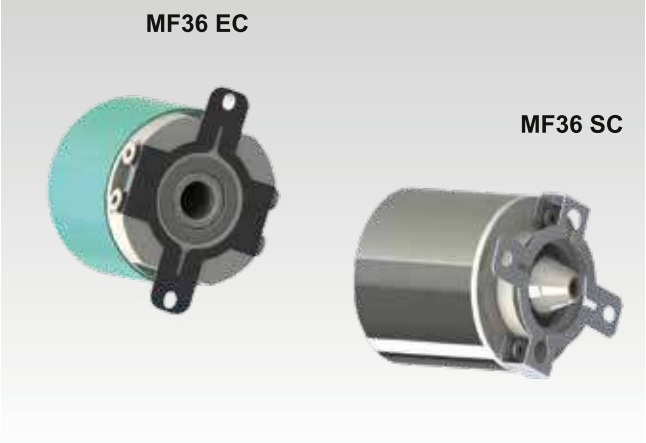

Features

- **Compact robust motor integration design**
- **12...bit SSI/BISS accurate position information**
- **2048 PPR sin cosine accurate speed information**
- **Through hollow shaft 8 mm**
- **Interfaces : SSI- - BISS**
- **IP65 protection class**

Technical data - electrical ratings

Voltage supply	4.75VDC to 5.5VDC or 7 - 30V
Protection:	Output short circuit protection. Reverse polarity protection
Consumption w/o load	≤120 mA (5 VDC)
Interface, Output	Sine cosine / 1 Vpp
Resolution (steps/turn)	up to 21 bit
Absolute accuracy	±0.01°
Absolute angle error	0.02T°
Output frequency	500 kHz (max.)
Output circuit	1 Vpp incremental Sin/Cos differential driver

Technical data - mechanical design

Dimensions (flange)	ø36 mm
Protection DIN EN 60529	IP 65
Operating speed	≤10000 rpm
Starting torque	≤0.03 Nm (IP 67)
Materials	Housing : Aluminium Flange : Aluminium Shaft : Stainless steel
Shaft specs	8 mm
Operating temperature	-40...+110 °C
Storage temperature	-40 °C up to +120 °C
Weight approx.	250 g
Approval	CE

Pulse diagram

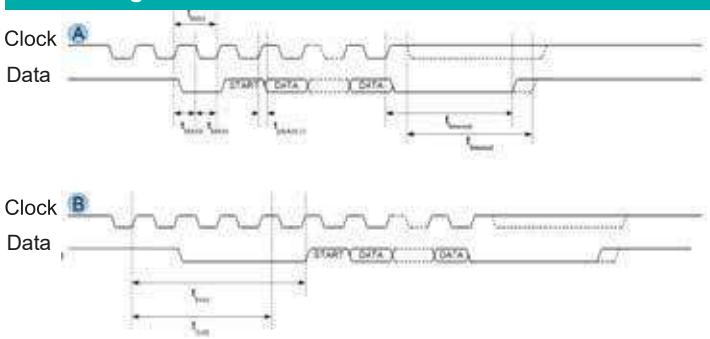

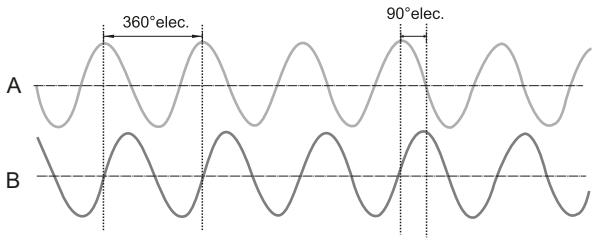

Signals shown at CW rotation with view on shaft's end

Symbol	Parameter	Conditions	Min	Max	Unit
tMAS	Permissible Clock Period	TIMO in accordance	100	2 x ttimeout	ns
tMASh	Permissible Signal Hi Level Duration		50	ttimeout	ns
tMASl	Permissible Signal Lo Level Duration		50		ns
treq	REQ Lo Level Duration		50	ttimeout	ns

FNC MF36 Series

Mechanical Dimensions

MF36 EC

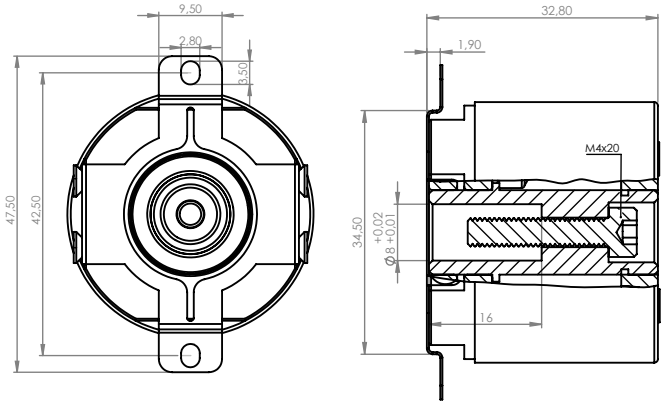

MF36 SC

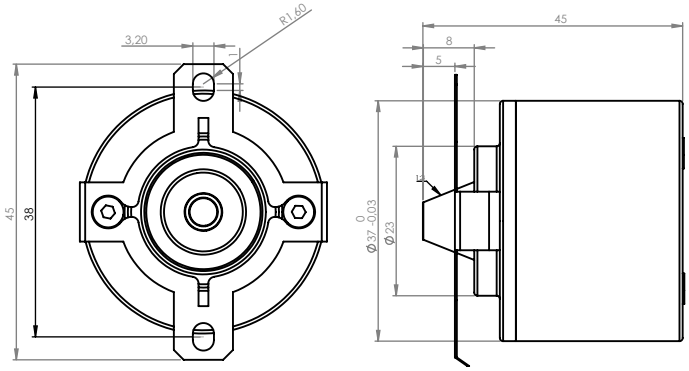

Cable / Connector Wiring

Function	Connector	Color	Renk
+VB	pin 1	Brown	Kahve
GND	pin 2	White	Beyaz
A	pin 3	Green	Yeşil
A'	pin 4	Green-Black	Yeşil-Siyah
B	pin 5	Yellow	Sarı
B'	pin 6	Yellow-Black	Sarı-Siyah
Clock	pin 7	Blue	Mavi
Clock-	pin 8	Blue-Black	Mavi-Siyah
Data	pin 9	Orange	Turuncu
Data-	pin 10	Orange-Black	Turuncu-Siyah
Preset	pin 11	Gray	Gri
Direction	pin 12	Gray-Black	Gri-Siyah
Shield	Connected to housing		

Encoder Part Number

FNC | MF | 36 | SC | 6 | S12 | M12 | SC2 | 30V | B | – | R4

MF: Motor Feedback

Housing 36: 36mm

Flange Type:
SC: Shaft conic
EC: End shaft conic

Shaft diameter : 6, 8
Other dimensions on request

S : Single Turn
12...19 bit options

M: Multi Turn
12, 14, 16 bit options

Electrical Connections:

Cable
R4 : radial 4m **R1C4 :** connector after 1m Cable

Connector:
R2312L **R2312R**

B: Binary **G:** Gray

Supply Voltage:
5V : 5V in / out **30V** : 5-30V in / out

SC1: 1024 SinCos
SC2: 2048 Sincos

FNC SC2048 Series, SinCos motorfeedback

FNC SC2048-R8S8

FNC SC2048-R8S34

FNC SC2048-R8S38

Features

- **Compact robust motor integration design**
- **1Vpp / 1PPR accurate position information**
- **2048 PPR sin cosine accurate speed information**
- **Installation diameter 65mm**
- **1:10 taper shaft**
- **IP67 protection class**

Technical data - mechanical design

Dimensions (flange)	ø56 mm
Clamp mounting diameter	65 mm
Protection DIN EN 60529	IP 67
Operating speed	≤10000 rpm
Starting torque	≤0.03 Nm (IP 67)
Materials	Housing : Aluminium Flange : Aluminium Shaft : Stainless steel
Shaft specs	Taper shaft Ø 9.25 Taper 1:10
Operating temperature	-40...+110 °C
Storage temperature	-40 °C up to +120 °C
Weight approx.	250 g
Approval	CE

Technical data - electrical ratings

Voltage supply	4.75VDC to 5.5VDC
Protection:	Output short circuit protection. Reverse polarity protection
Consumption w/o load	≤120 mA (5 VDC)
Interface, Output	Sine cosine / 1 Vpp
Resolution (steps/turn)	2048
Absolute accuracy	±0.17°
Absolute angle error	0.087°
Output frequency	500 kHz (max.)
Output circuit	1 Vpp incremental Sin/Cos differential driver

FNC SC2048 Series, SinCos motorfeedback

Mechanical Dimensions

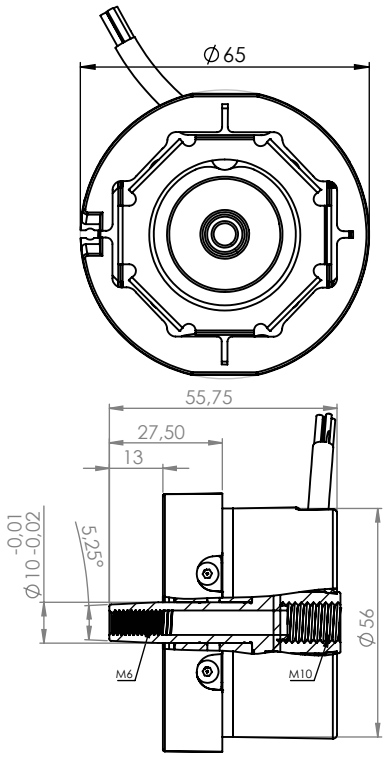

Cable / Connector Wiring

Function	Connector	Color	Renk
+VB	pin 1	Brown	Kahve
GND	pin 2	White	Beyaz
A	pin 3	Green	Yeşil
A'	pin 4	Green-Black	Yeşil-Siyah
B	pin 5	Yellow	Sarı
B'	pin 6	Yellow-Black	Sarı-Siyah
C	pin 7	Blue	Mavi
C'	pin 8	Blue-Black	Mavi-Siyah
D	pin 9	Orange	Turuncu
D'	pin 10	Orange-Black	Turuncu-Siyah
Z	pin 11	Gray	Gri
Z'	pin 12	Gray-Black	Gri-Siyah
Shield	Connected to housing		

Pulse Diagram

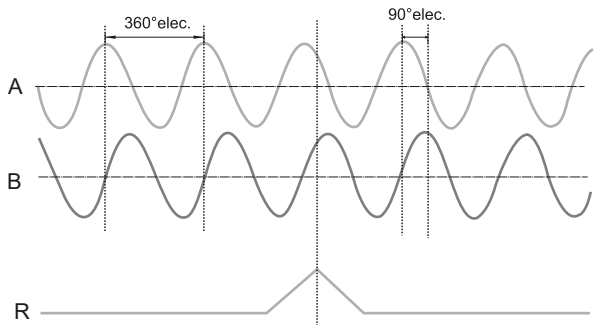

Signals shown at CW rotation with view on shaft's end

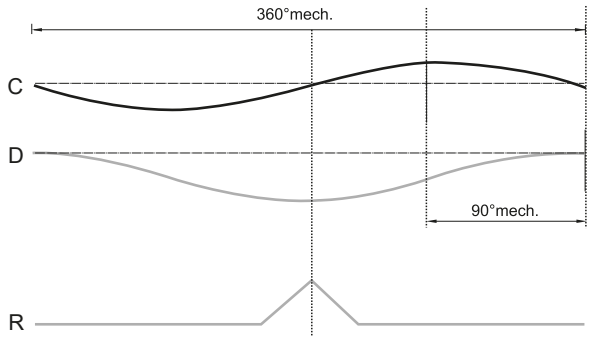

Signals shown at CW rotation with view on shaft's end

Encoder Part Number

FNC **SC** **2048** – **R30D15**

- **SC**: 1 PPR Sine Cosine / 1 turn
- **2048**: 2048 PPR Sine Cosine / 1 turn
- **R30D15**:
  - **R7** : Radial 7 meter cable
  - **R30D15** : Radial 30 cm cable with 15 pin male socket

Female Cable Connector

FCSF **D15** **R700**

- **D15** : Dsub 15 pin connector
- **R700** : Radial 7 meter cable

FNC BISS2048 Series, SSI/BISS+SinCos motorfeedback

FNC BISS2048-R8CS

FNC BISS2048-R8S8

FNC BISS2048-R8S34

FNC BISS2048-R8S38

FNC BISS2048-R8S42

Features

- **Compact robust motor integration design**
- **12...19bit SSI/BISS accurate position information**
- **2048 PPR sin cosine accurate speed information**
- **Installation diameter 65mm**
- **1:10 taper shaft**
- **IP67 protection class**

Technical data - mechanical design

Dimensions (flange)	ø56 mm
Clamp mounting diameter	65 mm
Protection DIN EN 60529	IP 67
Operating speed	≤10000 rpm
Starting torque	≤0.03 Nm (IP 67)
Materials	Housing : Aluminium Flange : Aluminium Shaft : Stainless steel
Shaft specs	Taper shaft Ø 9.25 Taper 1:10
Operating temperature	-40...+110 °C
Storage temperature	-40 °C up to +120 °C
Weight approx.	250 g
Approval	CE

Technical data - electrical ratings

Voltage supply	4.75VDC to 5.5VDC
Protection:	Output short circuit protection. Reverse polarity protection
Consumption w/o load	≤120 mA (5 VDC)
Interface, Output	Sine cosine / 1 Vpp
Resolution (steps/turn)	up to 19 bit
Absolute accuracy	±0.17°
Absolute angle error	0.087°
Output frequency	500 kHz (max.)
Output circuit	1 Vpp incremental Sin/Cos differential driver

FNC BISS2048 Series, SSI/BISS+SinCos motorfeedback

Mechanical Dimensions

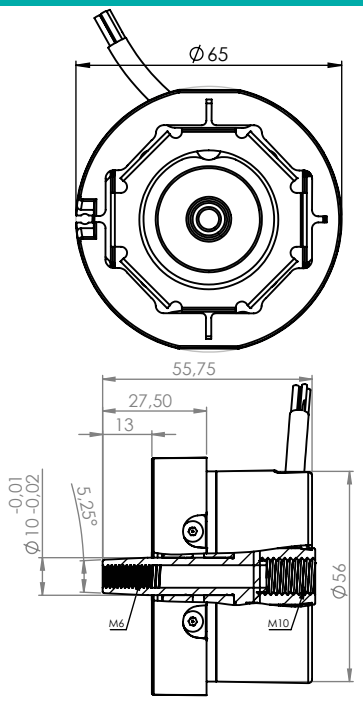

Cable / Connector Wiring

Function	Connector	Color	Renk
+VB	pin 1	Brown	Kahve
GND	pin 2	White	Beyaz
A	pin 3	Green	Yeşil
A'	pin 4	Green-Black	Yeşil-Siyah
B	pin 5	Yellow	Sarı
B'	pin 6	Yellow-Black	Sarı-Siyah
Clock	pin 7	Blue	Mavi
Clock-	pin 8	Blue-Black	Mavi-Siyah
Data	pin 9	Orange	Turuncu
Data-	pin 10	Orange-Black	Turuncu-Siyah
Preset	pin 11	Gray	Gri
Direction	pin 12	Gray-Black	Gri-Siyah
Shield	Connected to housing		

Pulse Diagram

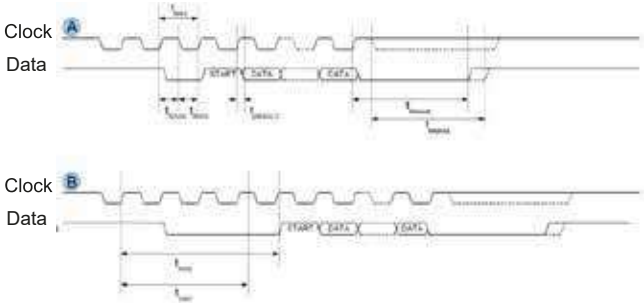

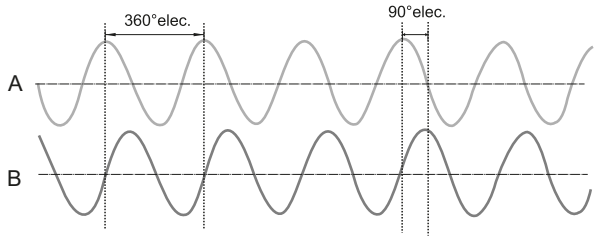

Signals shown at CW rotation with view on shaft's end

Symbol	Parameter	Conditions	Min	Max	Unit
tMAS	Permissible Clock Period	TIMO in accordance	100	2 x ttimeout	ns
tMASh	Permissible Signal Hi Level Duration		50	ttimeout	ns
tMASl	Permissible Signal Lo Level Duration		50		ns
treq	REQ Lo Level Duration		50	ttimeout	ns

Encoder Part Number

FNC **BISS** **2048** — **R30D15**

SSI : SSI Interface
BISS : BISS Interface

2048 PPR Sine Cosine / 1 turn

R7 : Radial 7 meter cable
R30D15 : Radial 30 cm cable with 15 pin male socket

Female Cable Connector

FCSF **D15** **R700**

D15 : Dsub 15 pin connector

R700 : Radial 7 meter cable

A
B
1
2
Programmable Multiturn
Analog Encoder

Absolute analog encoders

- Smart
- Easy

Motion Control Products

FNC Programmable MT Analog Output

Current / voltage output

FNC MT Programmable Analog Output — Ø50 Flange

Features

- **Programmable measuring range**
- **Industry 50 mm end hollow shaft version**
- **Robust mechanical and electrical construction**
- **Protection up to IP67**
- **0-10V voltage / 4-20mA current output**

Output Options :

Programmable;

- **0-10VDC Voltage**
- **0-5VDC Voltage**
- **4-20mA current**

Technical data - electrical ratings

Voltage supply	10-30VDC
Protection:	Output short circuit protection. Reverse polarity protection
Consumption w/o load	≤60 mA (24 VDC)
Output signals	0-10VDC Voltage output 0-5VDC Voltage output 4-20mA current output
Measuring range	up to 65536 revolution
Interference immunity	DIN EN 61000-6-2
Emitted interference	DIN EN 61000-6-4
Approval	CE

Technical data - mechanical design

Dimensions (flange)	ø50 mm
Shaft loading	≤140 N axial ≤240 N radial
Protection DIN EN 60529	IP54, IP65
Operating speed	≤10000 rpm
Starting torque	≤0.025 Nm (IP 65)
Materials	Housing: Aluminium Flange: Aluminium Shaft : Stainless steel
Shaft/Hollow shaft diameter:	6, 8, 10, 12 mm (other diameters on request)
Bearings lifetime:	$2x10^9$ rev. at 100% of full rated shaft load (minimum)
Operating temperature	-20...+85 °C
Storage temperature	-30 °C up to +90 °C
Weight approx.	250 g

Pulse Diagram

Example: 128 revolution current output.

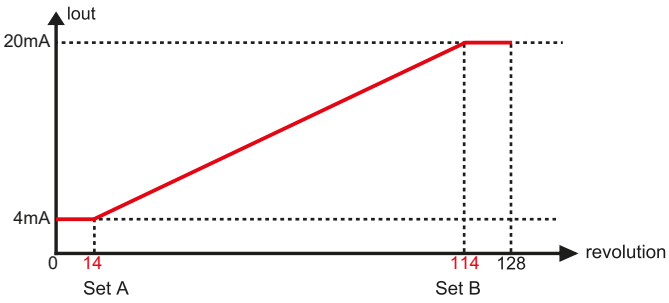

Accessories

Connectors and cables
CRM1205 M12 4 poles female connector or see page 206

Mounting coupling
PF481010 plastic or see page 204

Mounting accessories
SF58B square flange or see page 202-203

Ø50 Flange

FNC MT Programmable Analog Output

Mechanical Dimensions

50B

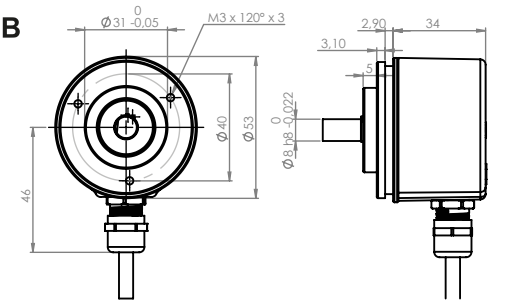

50S

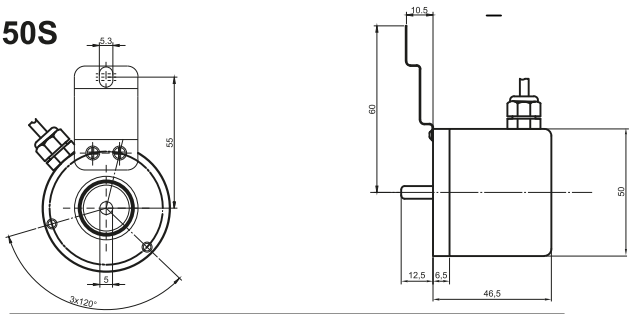

50E

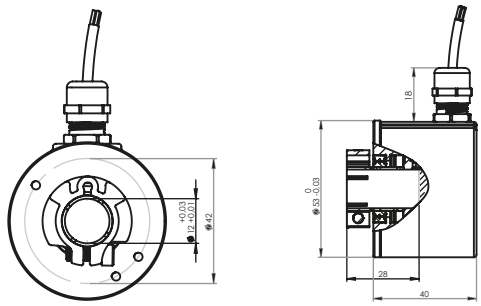

Cable Wiring

Function	Color	Renk	Explanation
+VB	Brown	Kahve	Supply voltage
GND	White	Beyaz	Ground
V	Green	Yeşil	Voltage output
A	Red	Kırmızı	Current output

Connector Wiring

Connector Type	Analog Output	+VDC	GND	SET1	SET2
CRM1205	1	2	3	4	5

Teach Procedure

Teach Procedure 1:
Press A and B button for 10 sec.
Leds will flash.
At start point press A button

Teach Procedure 2:
Turn shaft CW to final point.
Press B button at final point.
Teach procedure is done.

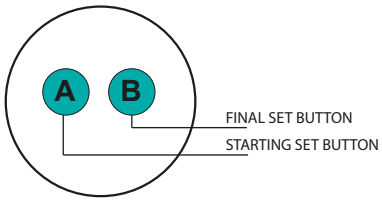

For fabrication settings press A and B button for 30 sec.

Encoder Part Number

FNC | P | A | A | 50 | B | 10 | M8 | C1 | 30V | – | CRM1205

Programmable

Absolute

Analog

Housing : 50mm

Flange Type:
E : End hollow shaft
B : Shaft clamping flange
S : Servo flange

Shaft diameter : 4, 6, 8, 10, 12, 14
Other dimensions on request

Electrical Connections:
Cable
R2 : radial 2m, shield not connected (standart)
A2 : axial 2m, shield not connected (standart)
CRM1205 : M12 5pin connector

Supply Voltage:
5 : 5V in/out **30 : 5 - 30V** in/out

Output type :
C1 : 4-20mA
V1 : 0-10V
V2 : 1-5V

Multiturn
4, 8, 12, 16, 20, 24, 32 bit

FNC MT Programmable Analog Output — Ø58 Flange

Features

- **Programmable measuring range**
- **Industry 58 mm end hollow shaft version**
- **Robust mechanical and electrical construction**
- **Protection up to IP67**
- **0-10V voltage / 4-20mA current output**

Output Options :

Programmable;

- **0-10VDC Voltage**
- **0-5VDC Voltage**
- **4-20mA current**

Technical data - electrical ratings

Voltage supply	10-30VDC
Protection:	Output short circuit protection. Reverse polarity protection
Consumption w/o load	≤60 mA (24 VDC)
Output signals	0-10VDC Voltage output 0-5VDC Voltage output 4-20mA current output
Measuring range	up to 65536 revolution
Interference immunity	DIN EN 61000-6-2
Emitted interference	DIN EN 61000-6-4
Approval	CE

Technical data - mechanical design

Dimensions (flange)	ø58 mm
Shaft loading	≤140 N axial ≤240 N radial
Protection DIN EN 60529	IP54, IP65
Operating speed	≤10000 rpm
Starting torque	≤0.025 Nm (IP 65)
Materials	Housing: Aluminium Flange: Aluminium Shaft : Stainless steel
Shaft/Hollow shaft diameter:	6, 8, 10, 12 mm (other diameters on request)
Bearings lifetime:	$2x10^9$ rev. at 100% of full rated shaft load (minimum)
Operating temperature	-20...+85 °C
Storage temperature	-30 °C up to +90 °C
Weight approx.	250 g

Pulse Diagram

Example: 128 revolution current output.

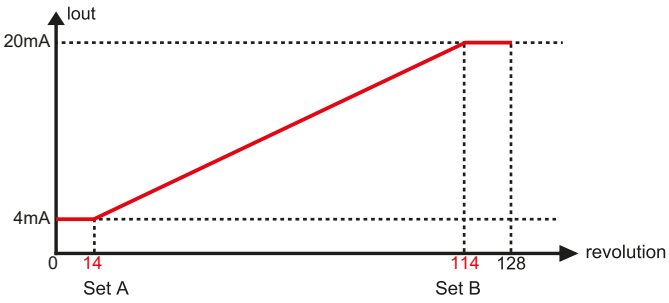

Accessories

Connectors and cables
CRM1205 M12 4 poles female connector or see page 206

Mounting coupling
PF481010 plastic or see page 204

Mounting accessories
SF58B square flange or see page 202-203

Ø58 Flange

FNC MT Programmable Analog Output

Mechanical Dimensions

58B

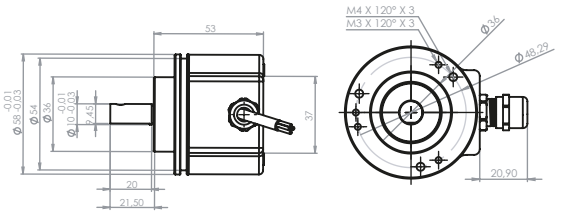

58S

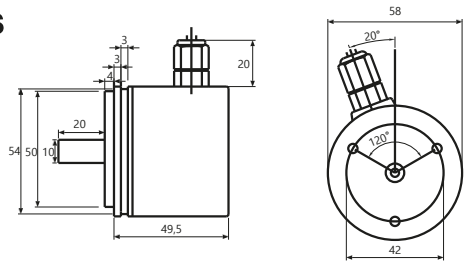

58E

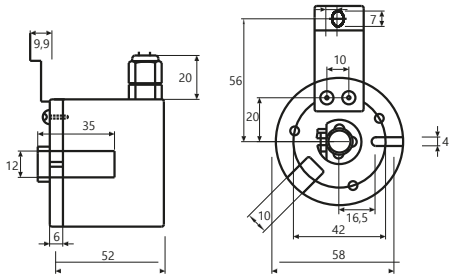

Cable Wiring

Function	Color	Renk	Explanation
+VB	Brown	Kahve	Supply voltage
GND	White	Beyaz	Ground
V	Green	Yeşil	Voltage output
A	Red	Kırmızı	Current output

Connector Wiring

Connector Type	Analog Output	+VDC	GND	SET1	SET2
CRM1205	1	2	3	4	5

Teach Procedure

Teach Procedure 1:
Press A and B button for 10 sec.
Leds will flash.
At start point press A button

Teach Procedure 2:
Turn shaft CW to final point.
Press B button at final point.
Teach procedure is done.

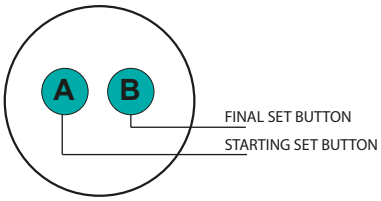

For fabrication settings press A and B button for 30 sec.

Encoder Part Number

FNC **P** **A** **A** **58** **B** **10** **M8** **C1** **30V** – **CRM1205**

- **P** – Programmable
- **A** – Absolute
- **A** – Analog
- **58** – **Housing :** 58mm
- **B** – **Flange Type:**
  E : End hollow shaft
  B : Shaft clamping flange
  S : Servo flange
- **10** – **Shaft diameter : 4, 6, 8, 10, 12, 14**
  Other dimensions on request
- **M8** – **Multiturn**
  4, 8, 12, 16, 20, 24, 32 bit
- **C1** – **Output type :**
  C1 : 4-20mA
  V1 : 0-10V
  V2 : 1-5V
- **30V** – **Supply Voltage:**
  5 : 5V in/out **30 : 5 - 30V** in/out
- **CRM1205** – **Electrical Connections:**
  Cable
  R2 : radial 2m, shield not connected (standart)
  A2 : axial 2m, shield not connected (standart)
  CRM1205 : M12 5pin connector

FNC ST Analog Output

50 mm & 58 mm Housing

Features

- **Industry 58 mm shaft version**
- **Industry 58 mm end hollow shaft version**
- **Robust mechanical and electrical construction**
- **Protection up to IP67**
- **0-10V voltage / 4-20mA current output versus position**

Output Options :

- **0-10VDC Voltage**
- **0-5VDC Voltage**
- **4-20mA current**

Technical data - electrical ratings

Voltage supply	10-30VDC
Protection:	Output short circuit protection. Reverse polarity protection
Consumption w/o load	≤60 mA (24 VDC)
Output signals	0-10VDC Voltage output 1-5VDC Voltage output 4-20mA current output
Resolution	up to 16 bit
Interference immunity	DIN EN 61000-6-2
Emitted interference	DIN EN 61000-6-4
Approval	CE

Technical data - mechanical design

Dimensions (flange)	ø58 mm
Shaft loading	≤140 N axial ≤240 N radial
Protection DIN EN 60529	IP54, IP65
Operating speed	≤10000 rpm
Starting torque	≤0.025 Nm (IP 67)
Materials	Housing: Aluminium Flange: Aluminium Shaft : Stainless steel
Shaft/Hollow shaft diameter:	6, 8, 10, 12 mm (other diameters on request)
Bearings lifetime:	$2x10^9$ rev. at 100% of full rated shaft load (minimum)
Operating temperature	-20...+85 °C
Storage temperature	-30 °C up to +90 °C
Weight approx.	250 g

Pulse Diagram

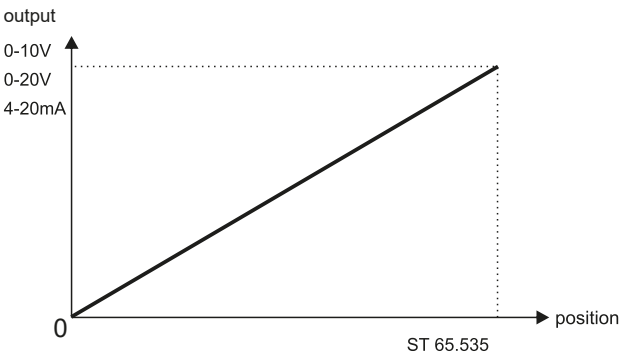

Accessories

Connectors and cables
CRM1205 M12 4 poles female connector or see page 206

Mounting coupling
PF481010 plastic or see page 204

Mounting accessories
SF58B square flange or see page 202-203

FNC ST Analog Output

Mechanical Dimensions

58B

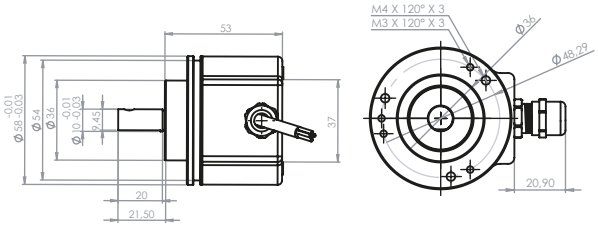

58S

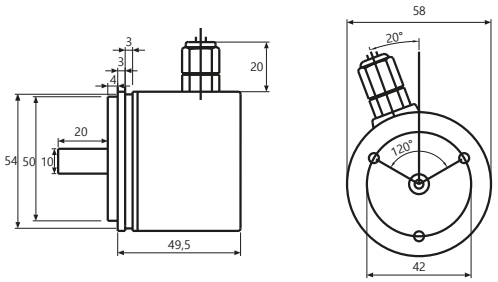

58E

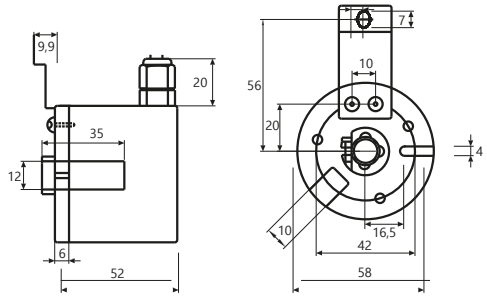

Cable Wiring

Function	Color	Renk	Explanation
+VB	Brown	Kahve	Supply voltage
GND	White	Beyaz	Ground
V	Green	Yeşil	Voltage output
A	Red	Kırmızı	Current output

Connector Wiring

Connector Type	+Vcc	GND	V	A	NC
CRM1204	1	2	3	4	
CRM1205	1	2	3	4	5

Encoder Part Number

FNC **AA** **58** **B** **10** **C1** **P00** **30V** – **R2**

AA : Absulute Analog

Housing:
50 : 50mm
58 : 58mm

Flange Type:
E : End hollow shaft
B : Shaft clamping flange
S : Servo flange

Shaft diameter : 4, 6, 8, 10, 12, 14
Other dimensions on request

Electrical Connections:

Cable
R2 : radial 2m, shield not connected (standart)
A2 : axial 2m, shield not connected (standart)
R1205 : M12 5pin connector

Supply Voltage:
5V : 5V in/out **30V :** 5-30V in/out

Output position
P00 : 360° position angle
P180 : 180° position angle
P90 : 90° position angle

Output type
C1 : 4-20mA current
C2 : 0-20 mA current
V1 : 0-10V voltage
V2 : 0-5V voltage

FNC Tacho Analog Output Versus Speed 50 mm & 58 mm Housing

Features

- Industry 58 mm shaft version
- Industry 58 mm end hollow shaft version
- Robust mechanical and electrical construction
- Protection up to IP67
- 0-10V voltage / 4-20mA current output versus speed

Output Options :

- 0-10VDC Voltage
- 0-5VDC Voltage
- 4-20mA current

Technical data - electrical ratings

Voltage supply	10-30VDC
Protection:	Output short circuit protection. Reverse polarity protection
Consumption w/o load	≤60 mA (24 VDC)
Output signals	0-10VDC Voltage output 0-5VDC Voltage output 4-20mA current output
Measuring range	up to 6000 rpm
Interference immunity	DIN EN 61000-6-2
Emitted interference	DIN EN 61000-6-4
Approval	CE

Technical data - mechanical design

Dimensions (flange)	ø58 mm
Shaft loading	≤140 N axial ≤240 N radial
Protection DIN EN 60529	IP54, IP65
Operating speed	≤10000 rpm
Starting torque	≤0.025 Nm (IP 67)
Materials	Housing: Aluminium Flange: Aluminium Shaft : Stainless steel
Shaft/Hollow shaft diameter:	6, 8, 10, 12 mm (other diameters on request)
Bearings lifetime:	$2x10^9$ rev. at 100% of full rated shaft load (minimum)
Operating temperature	-20...+85 °C
Storage temperature	-30 °C up to +90 °C
Weight approx.	250 g

Pulse Diagram

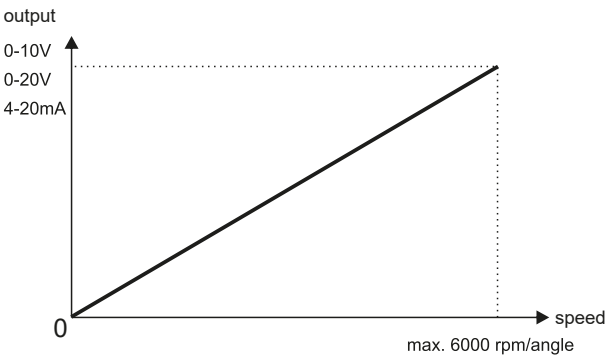

Accessories

Connectors and cables
CRM1205 M12 4 poles female connector or see page 206

Mounting coupling
PF481010 plastic or see page 204

Mounting accessories
SF58B square flange or see page 202-203

FNC Tacho Analog Output Versus Speed

Mechanical Dimensions

58B

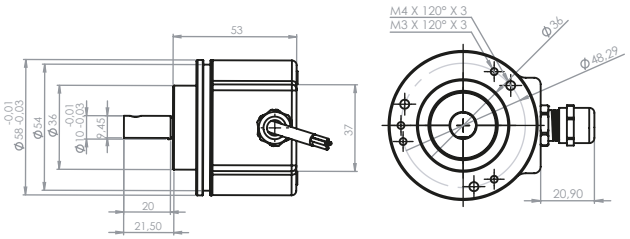

58S

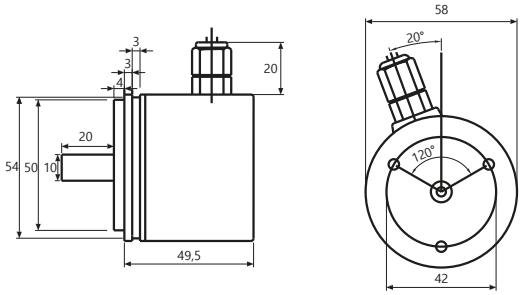

58E

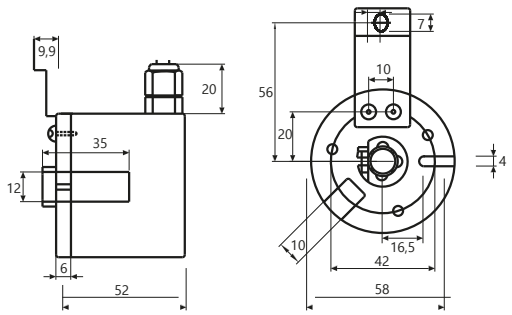

Cable Wiring

Function	Color	Renk	Explanation
+VB	Brown	Kahve	Supply voltage
GND	White	Beyaz	Ground
V	Green	Yeşil	Voltage output
A	Red	Kırmızı	Current output

Connector Wiring

Connector Type	+Vcc	GND	V	A	NC
CRM1204	1	2	3	4	
CRM1205	1	2	3	4	5

Encoder Part Number

FNC | T | 58 | B | 8 | C1 | T15 | 30V | – | R2

T : Tacho Analog Output

Housing:
50 : 50mm **58 :** 58mm

Flange Type:
E : End hollow shaft
B : Shaft clamping flange
S : Servo flange

Shaft diameter : 4, 6, 8, 10, 12, 14
Other dimensions on request

Output type :
C1 : 4-20mA
V1 : 0-10V
V2 : 0-5V

Electrical Connections:

Cable
R2 : radial 2m, shield not connected (standart)
A2 : axial 2m, shield not connected (standart)
RZ1205 : M12 5pin connector

Supply Voltage:
5: 5V in/out **30: 5-30V** in/out

Output speed
T60 : Tacho max 6000 rpm
T30 : Tacho max 3000 rpm
T15 : Tacho max 1500 rpm
T960 : Tacho max 0-10V/ 960 rpm
T03 : Tacho max 300 rpm

FENAC Automation Control

Linear Solutions

- Lineertiy
- Output Variety
- Compact Size

Motion Control Products

FNC TPD Wheel Series

Features

- **Suitable for measuring the length and speed of the moving target by selecting wheel type**
- **Distance measurement output wavelength and it conforms to the international measurement**
- **Different wheel diameters and surface options depending on the application**
- **Protection up to IP65 or IP54**
- **Easy Mounting**
- **<300 kHz frequency**

Technical data - electrical ratings

Voltage supply	4.75VDC to 30VDC 4.75VDC to 5.5VDC
Protection:	Output short circuit protection. Reverse polarity protection (except 5V version)
Consumption w/o load	≤60 mA (24 VDC)
Reference signal	Zero pulse, width 90° 180°, 360° optional
Output frequency	>200 kHz
Output signals	90° shifted A and B, Z + inverted
Output circuit	Linedriver/RS422 Push-pull short-circuit proof
Interference immunity	DIN EN 61000-6-2
Emitted interference	DIN EN 61000-6-4
Approval	CE

Technical data - mechanical design

Protection DIN EN 60529	IP54, IP65
Operating speed	≤10000 rpm
Starting torque	≤0.020 Nm (IP 67)
Operating temperature	-20...+85 °C
Storage temperature	-30 °C up to +90 °C
Weight approx.	650 g

Accessories

Connectors and cables
M12 4 poles, M15 8 poles and for other connector options see page 202

Resolution

Resolution:

For 250 mm Circumference Wheels

0,1 = 1PPR = 0,1 mm	= 2500	PPR Encoder
1 = 1PPR = 1 mm	= 250	PPR Encoder
2 = 1PPR = 2 mm	= 125	PPR Encoder
5 = 1PPR = 5 mm	= 50	PPR Encoder
10 = 1PPR = 10 mm (1 cm)	= 25	PPR Encoder

For 200 mm Circumference Wheels

2 = 1PPR = 2 mm	= 100	PPR Encoder
100 = 1PPR = 100 mm (10 cm)	= 2	PPR Encoder

FNC TPD Wheel Series

Mechanical Dimensions

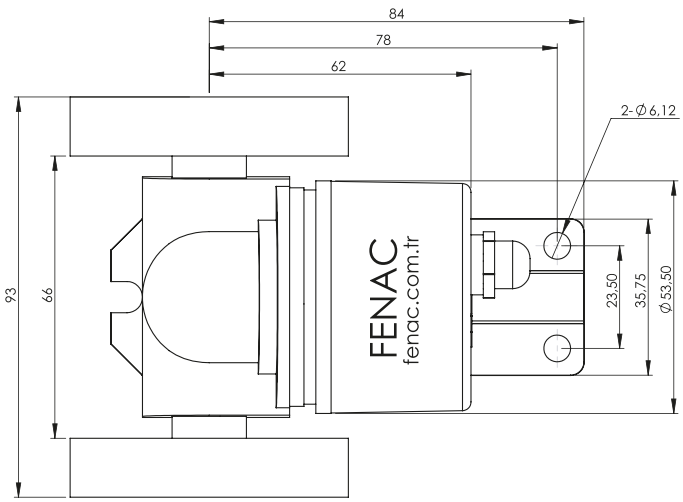

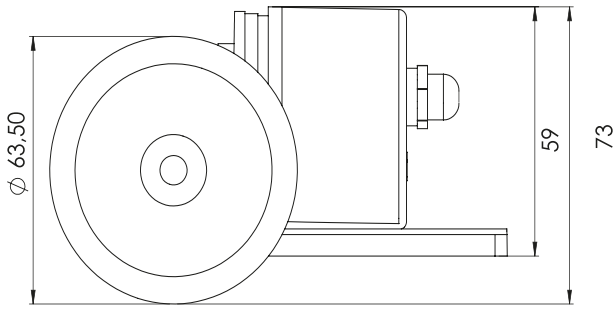

Pulse Diagram

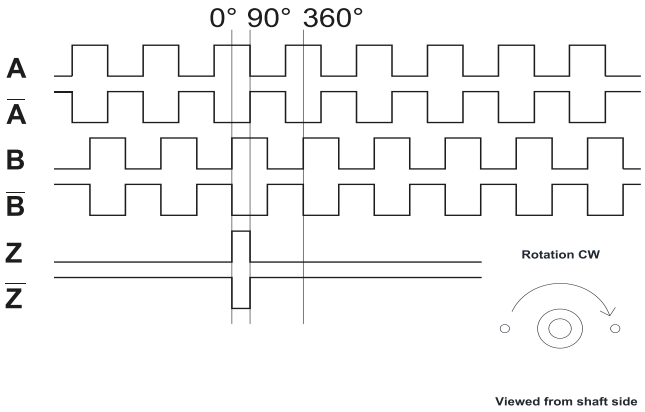

Cable Wiring

Function	Color	Renk	Explanation
+VB	Brown	Kahve	Supply Voltage
GND	White	Beyaz	Ground
A	Green	Yeşil	A Channel
A'	Red	Kırmızı	A Inverted Channel
B	Yellow	Sarı	B Channel
B'	Pink	Pembe	B Inverted Channel
Z	Gray	Gri	Z Channel
Z'	Blue	Mavi	Z Inverted Channel
Shield	Black	Siyah	Shield

System Part Number

FNC | TPD | 25 | 1

PD: Plastic Flat Surface

Wheel Circumference

20: 200 mm
25: 250 mm
30: 300 mm
50: 500 mm

Resolution:

For 250 mm Circumference Wheels

0,1 = 1PPR = 0,1 mm = 2500 PPR Encoder
1 = 1PPR = 1 mm = 250 PPR Encoder
2 = 1PPR = 2 mm = 125 PPR Encoder
5 = 1PPR = 5 mm = 50 PPR Encoder
10 = 1PPR = 10 mm (1 cm) = 25 PPR Encoder

For 200 mm Circumference Wheels

2 = 1PPR = 2 mm = 100 PPR Encoder
100 = 1PPR = 100 mm (10 cm) = 2 PPR Encoder

For All TPD Models;
5-30VDC, Push Pull Out, A-B Channel

FNC WMS Measuring System

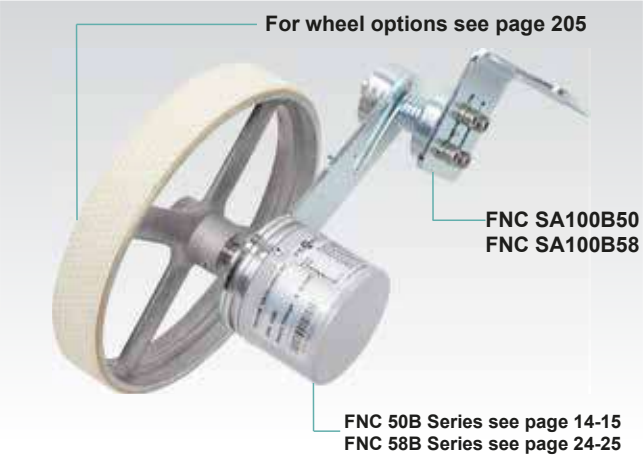

Features

- **Wheel + spring arm + encoder linear measurement system**
- **Robust mechanical and electrical construction**
- **Protection up to IP67**

PPR Options :

1 to 128 - 25 - 50 - 100 - 200 - 250 - 300 - 360 - 400 - 500 - 512 - 600 - 720 - 800 - 900 - 1000 - 1024 - 1250 - 1440 - 2000 - 2048 - 2500 - 3000 - 3600 - 4000 - 4096 - 5000 - 6000 - 8192 - 10000 - 12500 - 16384 - 20000 - 25000

Technical data - electrical ratings

Voltage supply	4.75VDC to 30VDC 4.75VDC to 5.5VDC
Protection:	Output short circuit protection. Reverse polarity protection (except 5V version)
Resolution (steps/turn)	1...25.000
Output frequency	>200 kHz
Output signals	90° shifted A and B, Z +

Technical data - mechanical design

Dimensions (flange)	ø58 mm
Shaft loading	≤140 N axial ≤240 N radial
Protection DIN EN 60529	IP 67
Operating speed	≤10000 rpm
Shaft diameter:	6, 8, 10, 12 mm (other diameters on request)
Operating / Storage temperature	-20...+85 °C -30 °C up to +90 °C
Weight approx.	250 g

FNCSA100
Spring lever for length determination

- For encoder FNC 40B, FNC 50B FNC 58B
- Variable installation from below, from above, horizontal, vertical

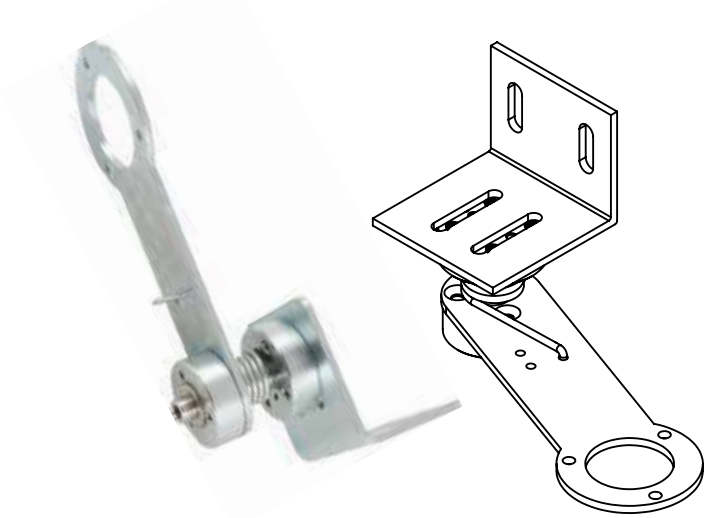

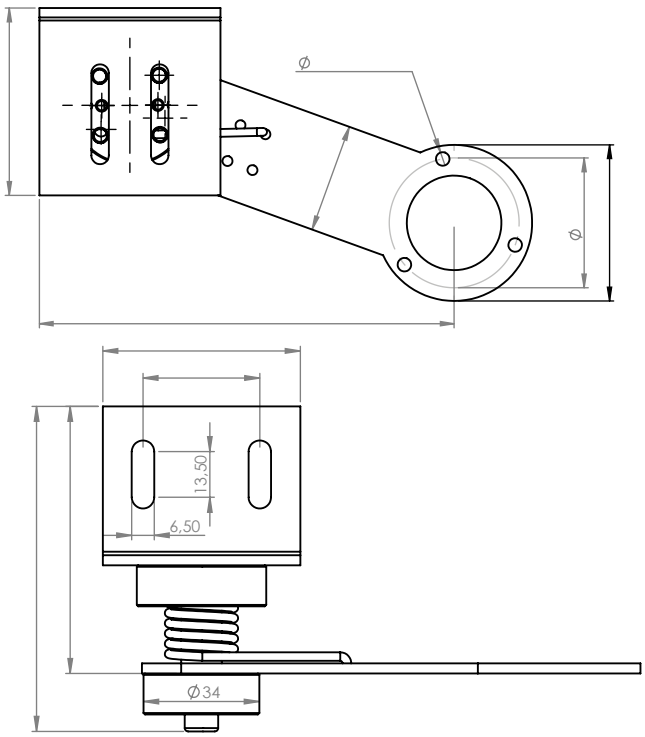

FNC CMS Measuring System

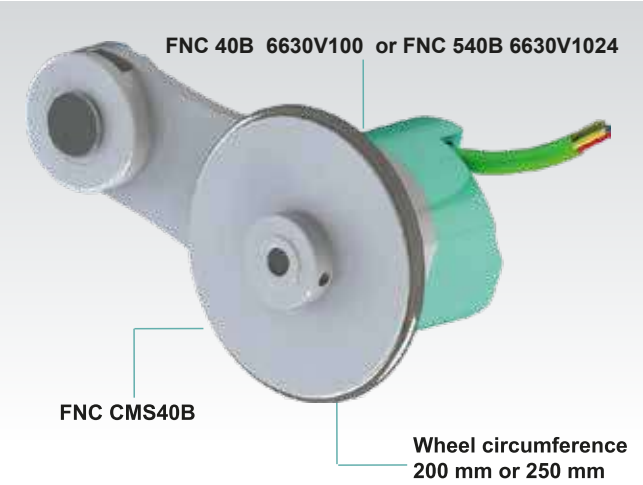

Features

- **Compact - small size wheel + spring arm + encoder linear measurement system**
- **Robust mechanical and electrical construction**
- **Protection up to IP67**

PPR Options :

1 to 128 - 25 - 50 - 100 - 200 - 250 - 300 - 360 - 400 - 500 - 512 - 600 - 720 - 800 - 900 - 1000 - 1024 - 1250 - 1440 - 2000 - 2048 - 2500 - 3000 - 3600 - 4000 - 4096 - 5000 - 6000 - 8192 - 10000 - 12500 - 16384 - 20000 - 25000

Technical data - electrical ratings

Voltage supply	4.75VDC to 30VDC 4.75VDC to 5.5VDC
Protection:	Output short circuit protection. Reverse polarity protection (except 5V version)
Resolution (steps/turn)	1...25.000
Output frequency	>200 kHz
Output signals	90° shifted A and B, Z +

Technical data - mechanical design

Dimensions (flange)	ø58 mm
Shaft loading	≤140 N axial ≤240 N radial
Protection DIN EN 60529	IP 67
Operating speed	≤10000 rpm
Shaft diameter:	6, 8, 10, 12 mm (other diameters on request)
Operating / Storage temperature	-20...+85 °C -30 °C up to +90 °C
Weight approx.	250 g

Mechanical Dimensions

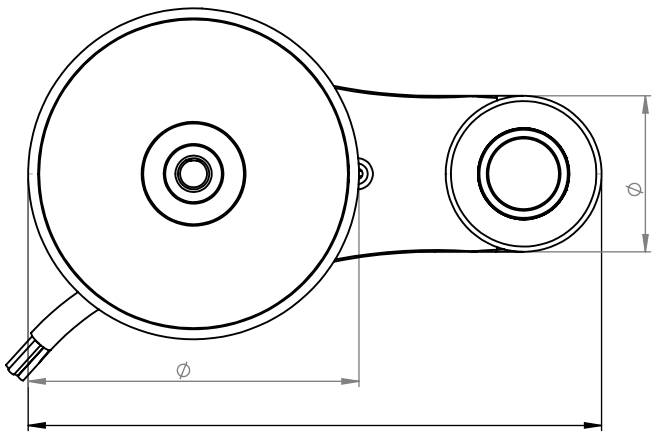

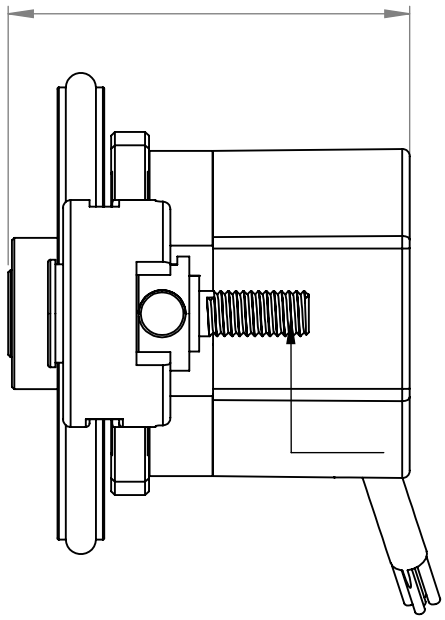

FLM Linear Magnetic Sensors

Features

- **Resolution up to 0,001 mm**
- **Robust mechanical and electrical construction**
- **Protection to IP67**
- **Periodic reference signal.**

Resolution Options :

2.5, 5, 10, 12.5, 20, 25, 40, 50, 80, 100, 200um for 5 mm tape
0.5, 1, 2, 4, 5, 8, 10, 16, 20, 25, 40, 50, 80um for 2 mm tape

Technical data - electrical ratings

Voltage supply	4.75VDC to 30VDC 4.75VDC to 5.5VDC
Protection:	Output short circuit protection. Reverse polarity protection (except 5V version)
Consumption w/o load	≤60 mA (24 VDC)
Resolution	See part number selection
Reference signal	Zero pulse, width 90° 180°, 360° optional
Output signals	90° shifted A and B, Z + inverted
Output circuit	Linedriver/RS422 Push-pull short-circuit proof
Interference immunity	DIN EN 61000-6-2
Emitted interference	DIN EN 61000-6-4
Approval	CE

Technical data - mechanical design

Sensor/tape reading distance	0.1...2mm
Pole Length	5mm for FMTL500 tape 2mm for FMTL200 tape
Protection DIN EN 60529	IP 67
Travel speed	≤10000 rpm
Starting torque	≤0.025 Nm (IP 67)
Materials	Housing: Zinc die cast
System accuracy	±0.025mm for linear ±1°
Repead	±10um
Operating temperature	-10...+70 °C
Storage temperature	-30 °C up to +70 °C
Weight approx.	250 g

** 5 mm pole pitch magnetic band : **MB05**
** 2 mm pole pitch magnetic band : **MB02**

FLM Linear Magnetic Sensors

Mechanical Dimensions

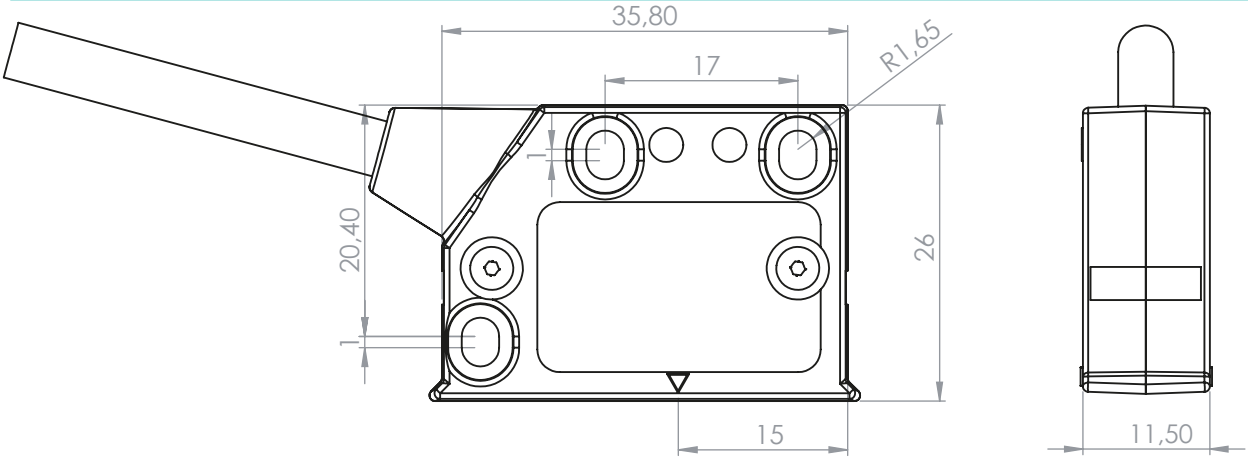

Pulse Diagram

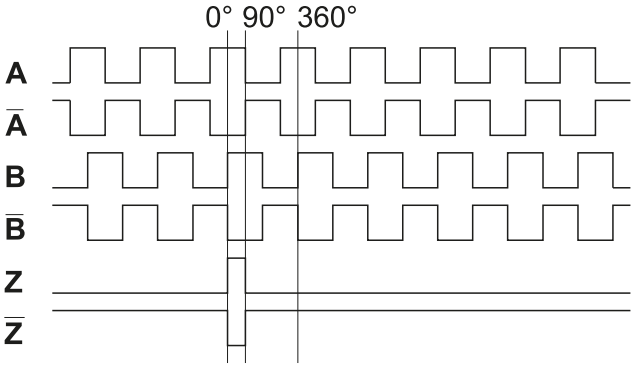

Cable Wiring

Function	Color	Renk	Explanation
+VB	Brown	Kahve	Supply Voltage
GND	White	Beyaz	Ground
A	Green	Yeşil	A Channel
A'	Red	Kırmızı	A Inverted Channel
B	Yellow	Sarı	B Channel
B'	Pink	Pembe	B Inverted Channel
Z	Gray	Gri	Z Channel
Z'	Blue	Mavi	Z Inverted Channel
Shield	Black	Siyah	Shield

Encoder Part Number

FLM **5** **005** **2** **30V** – **R2**

Tape Type:
5 : 5mm width tape
2 : 5mm width tape

Resolution : 0.005mm / 5um
Options :
2.5, 5, 10, 12.5, 20, 25, 40, 50, 80, 100, 200um for 5 mm tape
0.5, 1, 2, 4, 5, 8, 10, 16, 20, 25, 40, 50, 80um for 2 mm tape

Output Channels
1 : A
2 : AB
3 : ABZ
4 : AB+A' B'
6 : ABZ+A' B' Z'

Electrical Connections:
Cable
R2 : radial 2m, shield not connected (standart)

Supply Voltage and output circuit :
5V : 5V in / out
245V : 5-30V in 5V out
30V : 5-30V in / out

FENAC Automation Control

Bearingless Encoders

- Micro
- Smooth
- Flexible

Motion Control Products

Linear & Bearingless encoders

Resolution 1 ...65536 for Incremental Verison
Resolution 8 to 18 bit for Absolute Version
SSI / BISS Interface

FNCA MAR3015 Series, Incremental & Absolute Axial

Features

- Off - Axis Incremental & Commutation rotary encoder
- Robust mechanical and electrical construction
- Corrosion resistant magnetic ring
- Outer diameter 30 mm
- Inner diameter 15mm
- Up to 65.536 PPR max. for incremental rotary encoder
- Up to 18 bit for absolute rotary encoder
- Up to 16 pole pairs
- <300 kHz frequency
- Magnetic system

Technical data

Voltage supply	4.75VDC to 5.5VDC
Protection:	Output short circuit protection. Reverse polarity protection
Consumption w/o load	≤60 mA
Output circuit	Linedriver/RS422 Push-pull short-circuit proof NPN Open Collector
EMC Standars	EN 61000-6-2 / EN 61000-6-4
Approval	CE
Dimensions (ring)	ø30 mm
Protection DIN EN 60529	IP54, IP65
Operating speed	≤10000 rpm
Materials	Ring: Aluminium
Operating / Storage temperature	-20...+85 °C / -30°C ...+90°C
Weight approx.	200 g

Cable Wiring

Incremental Version

Function	Color
+VB	Brown
GND	White
A	Green
A'	Red
B	Yellow
B'	Pink
Z	Gray
Z'	Blue
U	Transparent
V	Orange
W	Black
shield	

Absolute Version

Function	Color
+VB	Brown
GND	White
Clock+	Blue
Clock-	Blue-black
Data+	Orange
Data-	Orange-black
Preset	Gray
shield	

Pulse Diagram for Absolute Version

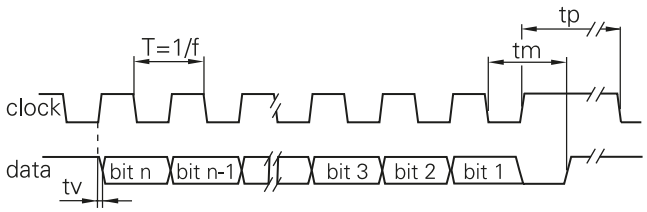

Clock frequency, f	50...2000 kHz for SSI up to 10MHz for BISS
Code	Binary or gray
Status and parity bit	On request
Monoflop time tm	>15µs
Clock time out	Programmable at factory

Pulse Diagram for Incremental Version

Clockwise rotating direction when looking at flange.

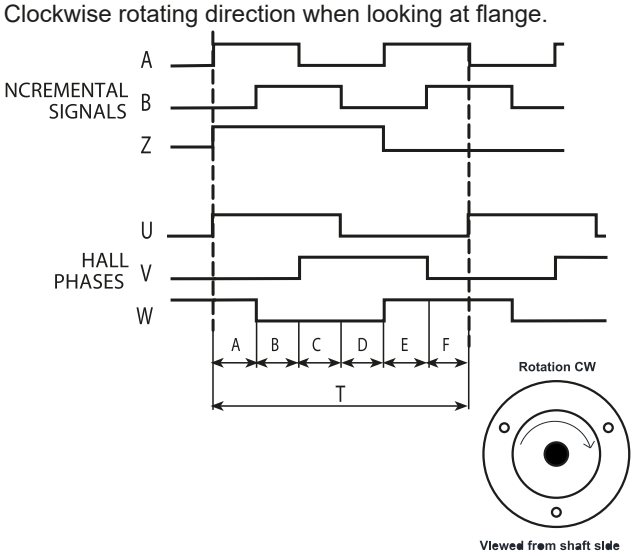

FNCA MAR3015 Series, Incremental & Absolute Axial

Mechanical Dimensions

Cover Type

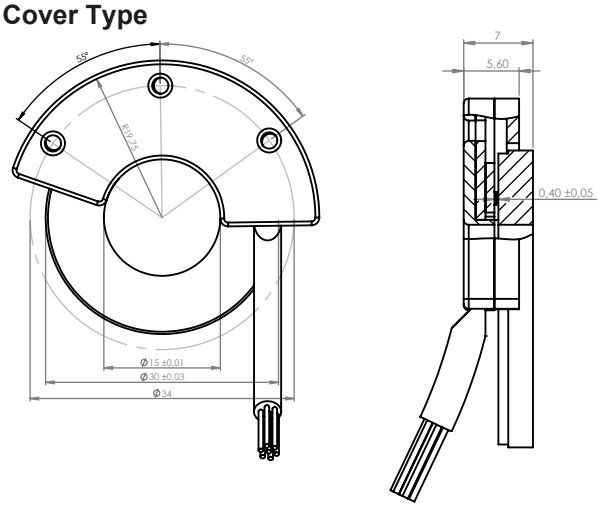

PCB Type

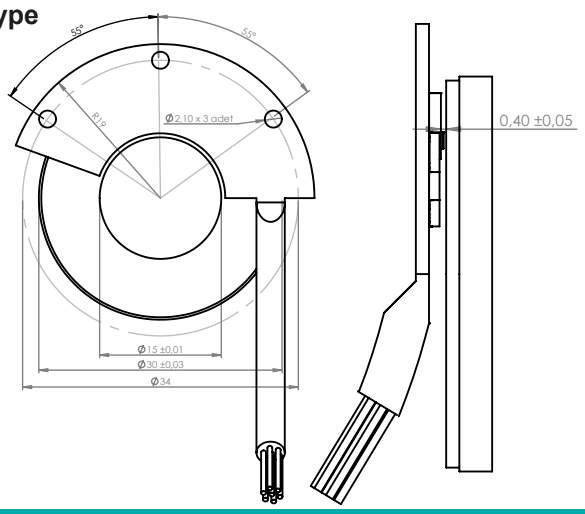

Encoder Part Number for Absolute Version

FNCA	P	30	15	S12	30V	B	–	R2

P : PCB
C : Cover

Housing:
30 : 15mm

Shaft Diameter : 10, 15, 20, 30, 35 mm
others on request

S : single turn
8 ...18 bit

Electrical Connections:

Cable
R2 : radial 2m, shield not connected (standart)

B : Binary

Supply Voltage and output circuit :
5V : 5V in / out
245V : 5-30V in 5V out
30V : 5-30V in / out

Encoder Part Number for Incremental & Commutatiton Version

FNCI	P	30	15	6	6P	30V	1024	–	R2

P : PCB
C : Cover

Housing:
30 : 30 mm

Shaft Diameter : 10, 15, 20, 30, 35 mm
others on request

Output Channels
1 : A
2 : AB
3 : ABZ
4 : AB+A' B'
6 : ABZ+A' B' Z'

Pole Pairs
2P : 2 poles
4P : 4 poles
6P : 6 poles
8P : 8 poles
10P : 10 poles
12P : 12 poles
16P : 16 poles
Empty : without commutation, direct incremental

Electrical Connections:

Cable
R2 : radial 2m, shield not connected (standart)

PPR Options :

1 to 128 - 25 - 50 - 100 - 200 - 250 - 300 - 360 - 400 - 500 - 512 - 600 - 720 - 800 - 900 - 1000 - 1024 - 1250 - 1440 - 2000 - 2048 - 2500 - 3000 - 3600 - 4000 - 4096 - 5000 - 6000 - 8192 - 10000 - 12500 - 20000 - 25000 ... 65536

Supply Voltage and output circuit :
5V : 5V in / out
245V : 5-30V in 5V out
30V : 5-30V in / out

Linear & Bearingless encoders

Resolution 1...65536 pulses for Incremental Version
Resolution 8 to 18 bit for Absolute Version
SSI / BISS Interface

FNC MAR55 Series, Incremental & Absolute Axial

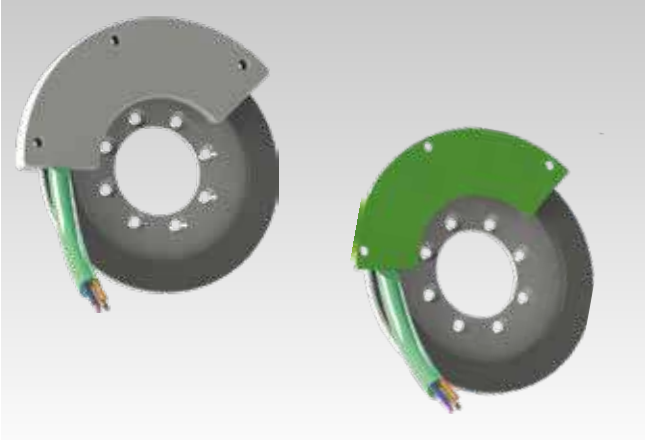

Features

- Off - Axis Incremental & Absolute rotary encoder
- Robust mechanical and electrical construction
- Corrosion resistant magnetic ring
- Outer diameter 55 mm
- Inner diameter 35 mm
- Up to 65.536 PPR max. for incremental rotary encoder
- Up to 18 bit for absolute rotary encoder
- <300 kHz frequency
- Magnetic system

Technical data

Voltage supply	4.75VDC to 30VDC 4.75VDC to 5.5VDC
Protection:	Output short circuit protection. Reverse polarity protection (except 5V version)
Consumption w/o load	≤60 mA (24 VDC)
Output circuit	Linedriver/RS422 Push-pull short-circuit proof
Dimensions (ring)	ø55 mm
Protection DIN EN 60529	IP54, IP65
Operating speed	≤10000 rpm
Materials	Ring: Aluminium
Operating / Storage temperature	-20...+85 °C / -30 °C ... +90 °C
Weight approx.	350 g
EMC Standards	EN 61000-6-2 /EN 6100-6-4
Approval	CE

Cable Wiring

Incremental Version

Function	Color
+VB	Brown
GND	White
A	Green
A'	Red
B	Yellow
B'	Pink
Z	Gray
Z'	Blue
U	Transparent
V	Orange
W	Black
shield	

Absolute Version

Function	Color
+VB	Brown
GND	White
Clock+	Blue
Clock-	Blue-black
Data+	Orange
Data-	Orange-black
Preset	Gray
shield	

Pulse Diagram for Absolute Version

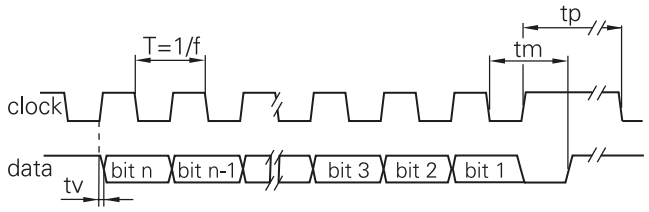

Clock frequency, f	50...2000 kHz for SSI up to 10MHz for BISS
Code	Binary or gray
Status and parity bit	On request
Monoflop time tm	>15µs
Clock time out	Programmable at factory

Pulse Diagram for Incremental Version

Clockwise rotating direction when looking at flange.

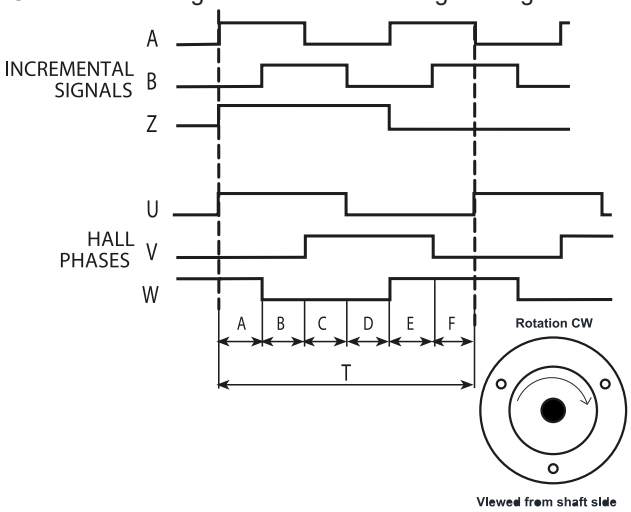

FNC MAR55 Series, Incremental & Absolute Axial

Mechanical Dimensions

Cover Type

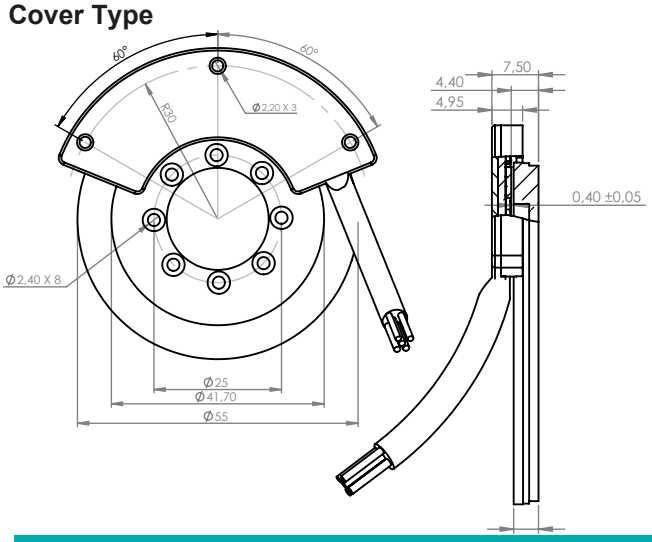

PCB Type

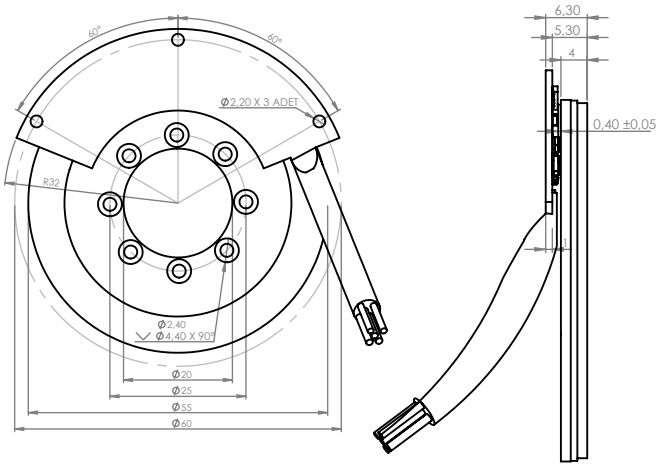

Encoder Part Number for Absolute Version

FNCA	P	55	35	S12	30V	B	–	R2

P : PCB
C : Cover

Housing:
55 : 55mm

Shaft Diameter : 10, 15, 20, 30, 35 mm
others on request

S : single turn
8 ...18 bit

Electrical Connections:

Cable
R2 : radial 2m, shield not connected (standart)

B : Binary

Supply Voltage and output circuit :
5V : 5V in / out
245V : 5-30V in 5V out
30V : 5-30V in / out

Encoder Part Number for Incremental & Commutatiton Version

FNCI	P	55	35	6	8P	30V	1024	–	R2

P : PCB
C : Cover

Housing:
55 : 55mm

Shaft Diameter : 10, 15, 20, 30, 35 mm
others on request

Output Channels
1 : A
2 : AB
3 : ABZ
4 : AB+A' B'
6 : ABZ+A' B' Z'

Electrical Connections:

Cable
R2 : radial 2m, shield not connected (standart)

PPR Options :

1 to 128 - 25 - 50 - 100 - 200 - 250 - 300 - 360 - 400 - 500 - 512 - 600 - 720 - 800 - 900 - 1000 - 1024 - 1250 - 1440 - 2000 - 2048 - 2500 - 3000 - 3600 - 4000 - 4096 - 5000 - 6000 - 8192 - 10000 - 12500 - 20000 - 25000 ... 65536

Supply Voltage and output circuit :
5V : 5V in / out
245V : 5-30V in 5V out
30V : 5-30V in / out

Pole Pairs
2P : 2 poles
4P : 4 poles
6P : 6 poles
8P : 8 poles
10P : 10 poles
12P : 12 poles
16P : 16 poles
Empty : without commutation, direct incremental

FNC MRR Series, Incremental Radial

Features

- **Resolution up to 0,001 mm**
- **Robust mechanical and electrical construction**
- **Protection to IP67**
- **Periodic reference signal**
- **MRR200 (Rotary)**

Resolution Options :

512, 1024, 1600, 2048, 3200, 4096, 524.288

Technical data - electrical ratings

Voltage supply	4.75VDC to 30VDC 4.75VDC to 5.5VDC
Protection:	Output short circuit protection. Reverse polarity protection (except 5V version)
Consumption w/o load	≤60 mA (24 VDC)
Resolution	See part number selection
Reference signal	Zero pulse, width 90° 180°, 360° optional
Output signals	90° shifted A and B, Z + inverted
Output circuit	Linedriver/RS422 Push-pull short-circuit proof
Interference immunity	DIN EN 61000-6-2
Emitted interference	DIN EN 61000-6-4
Approval	CE

Technical data - mechanical design

Pole Length	2mm for MRR200 tape
Protection DIN EN 60529	IP 67
Travel speed	≤10000 rpm
Starting torque	≤0.025 Nm (IP 67)
Materials	Ring : Stainless Steel
System accuracy	±0.025mm for rotary ±1°
Repead	±10um
Operating temperature	-10...+70 °C
Storage temperature	-30 °C up to +70 °C
Weight approx.	250 g

FNC MRR Series, Incremental Radial

Mechanical Dimensions

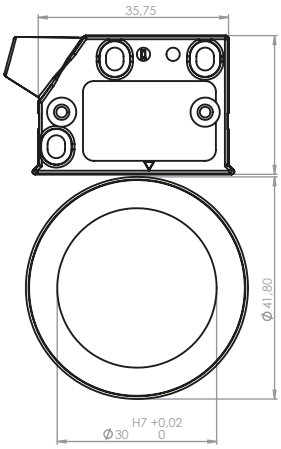

Pulse Diagram

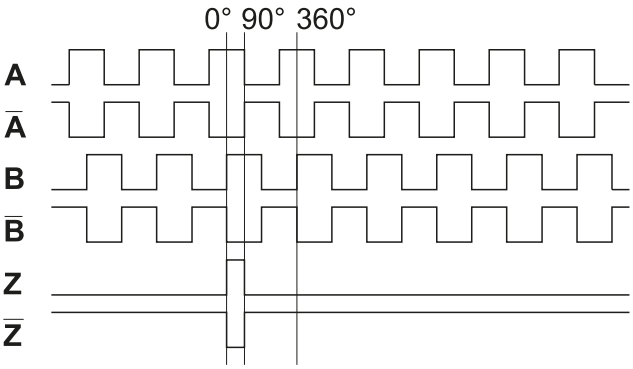

Cable Wiring

Function	Color	Renk	Explanation
+VB	Brown	Kahve	Supply Voltage
GND	White	Beyaz	Ground
A	Green	Yeşil	A Channel
A'	Red	Kırmızı	A Inverted Channel
B	Yellow	Sarı	B Channel
B'	Pink	Pembe	B Inverted Channel
Z	Gray	Gri	Z Channel
Z'	Blue	Mavi	Z Inverted Channel
Shield	Black	Siyah	Shield

Encoder Part Number

FNC | MRR | S | 1024 | 30V | N | – | R2

Flange Type:
S : Sensor Led

PPR Options :
512 - 1024 - 1600 - 2048 - 3200 - 4096 - ... 524288

Supply Voltage and output circuit :
5V : 5V in / out
245V : 5-30V in 5V out
30V : 5-30V in / out

Electrical Connections:
Cable
R2 : radial 2m, shield not connected (standart)
Connector:
R1204

N : without reference magnet
Z : with reference magnet

FNC MBI50 Incremental & MBA50 Absolute Series

Features

- Off - Axis Absolute rotary encoder
- Robust mechanical and electrical construction
- Corrosion resistant magnetic ring
- Outer diameter 55 mm
- Inner diameter 35 mm
- Up to 16 bit
- <300 kHz frequency
- Magnetic system

Technical data - electrical ratings

Voltage supply	4.75VDC to 30VDC 4.75VDC to 5.5VDC
Protection:	Output short circuit protection. Reverse polarity protection (except 5V version)
Consumption w/o load	≤60 mA (24 VDC)
Resolution (steps/turn)	up to 16 bit
Reference signal	Zero pulse, width 90° 180°, 360° optional
Output frequency	>200 kHz
Output signals	90° shifted A and B, Z + inverted
Interference	SSI or BISS
Output circuit	Linedriver/RS422 SSI Linedriver/RS485 Push-pull short-circuit proof NPN Open Collector
Interference immunity	DIN EN 61000-6-2
Emitted interference	DIN EN 61000-6-4

Technical data - mechanical design

Dimensions (ring)	ø50 mm
Protection DIN EN 60529	IP54, IP65
Operating speed	≤120 rpm
Materials	Ring: Aluminium
Shaft diameter:	6, 8, 10, M6, M7 mm (other diameters on request)
Operating temperature	-40...+85 °C
Storage temperature	-30 °C up to +90 °C
Service life	No limitation
Weight approx.	53 g

Pulse Diagram - Incremental

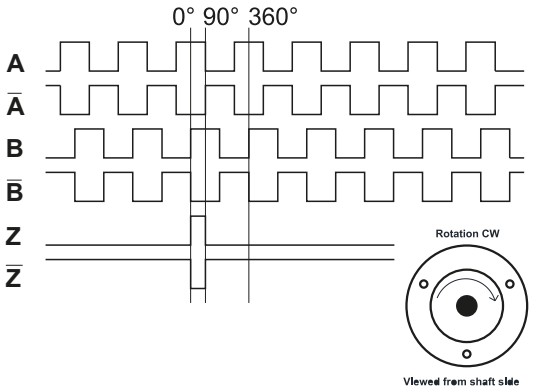

Pulse Diagram - Absolute

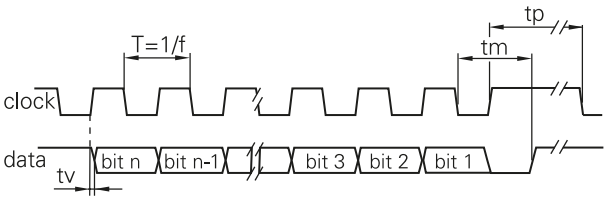

Clock frequency, f	50...2000 kHz for SSI up to 10MHz for BISS
Code	Binary or gray
Status and parity bit	On request
Monoflop time tm	>15µs
Clock time out	Programmable at factory

FNC MBI50 Incremental & MBA50 Absolute Series

Mechanical Dimensions

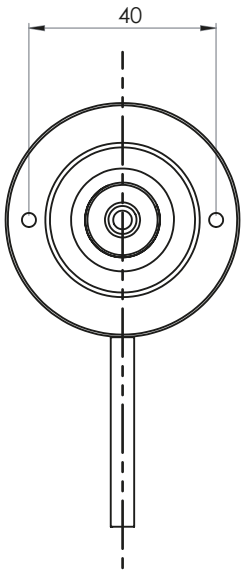

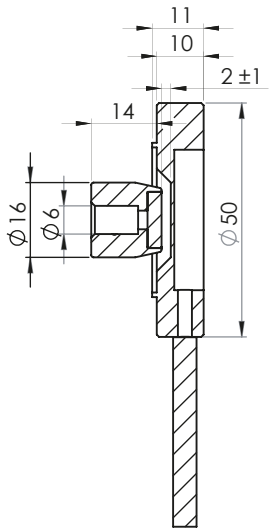

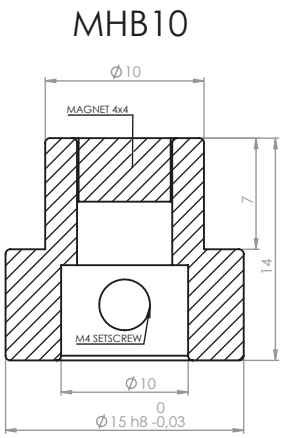

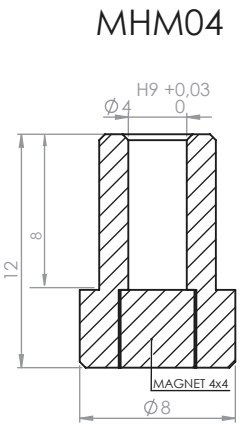

MHB10 : Magnet Holder Big Version

MHM04 : Magnet Holder Medium Version

Cable / Connector Wiring - Absolute

Connector	Core colour	Signals	Description
Pin 1	blue	Clock+	Clock signal
Pin 2	blue-black	Clock-	Clock signal
Pin 3	orange	Data+	Data signal
Pin 4	orange-black	Data-	Data signal
Pin 5	gray	Zero	Zero setting input
Pin 6,7,8,9	–	n.c.	–
Pin 10	gray-black	up/down	direction input
Pin 11	white	0 V	GND
Pin 12	brown	+Vs	Supply voltage
Screen: not connected to housing			
Cable data: 4 x 2 x 0.14 mm²			

Cable Wiring - Incremental

Function	Color	Renk	Explanation
+VB	Red	Kırmızı	Supply Voltage
GND	Black	Siyah	Ground
A	Yellow	Sarı	A Channel
A'	Yellow-White	Sarı-Beyaz	A Inverted Channel
B	Blue	Mavi	B Channel
B'	Blue-White	Mavi-Beyaz	B Inverted Channel
Z	Orange	Turuncu	Z Channel
Z'	Orange-White	Turuncu-Beyaz	Z Inverted Channel
Shield			Shield

Encoder Part Number

FNC | **MBA** | **50** | **6** | **S12** | **30V** | **B** | **–** | **R2**

MBA : Absolute
MBI : Incremental

Housing:
50 : 50mm

Magnet Rotor: 6, 8, 10 mm
Screw : M6, M7

S : single turn *
8 ...16 bit
2048 :2048 ppr Sine Cosine /1 Turn **

Electrical Connections:
Cable
R2 : radial 2m, shield not connected (standart)

B : Binary *

Supply Voltage and output circuit :
5V : 5V in / out
245V : 5-30V in 5V out
30V : 5-30V in / out

* : **FNC MBA 50 Series**
** : **FNC MBI 50 Series**

FNC MBI44 & MBI 58 Series

Features

- **Off - Axis Incremental rotary encoder**
- **Robust mechanical and electrical construction**
- **Corrosion resistant magnetic ring**
- **Outer diameter 50 mm**
- **Inner diameter 35 mm**
- **Up to 4096 PPR max.**
- **<300 kHz frequency**
- **Magnetic system**

PPR Options :

64 - 128 - 256 - 512 - 1024 - 2048 - 4096

Technical data - electrical ratings

Voltage supply	4.75VDC to 30VDC 4.75VDC to 5.5VDC
Protection:	Output short circuit protection. Reverse polarity protection (except 5V version)
Consumption w/o load	≤60 mA (24 VDC)
Resolution (steps/turn)	1... up to 4096
Output frequency	>200 kHz
Output signals	90° shifted A and B, Z + inverted
Output circuit	Linedriver/RS422 Push-pull short-circuit proof NPN Open Collector
Interference immunity	DIN EN 61000-6-2
Emitted interference	DIN EN 61000-6-4
Approval	CE

Technical data - mechanical design

Dimensions (ring)	ø44-58 mm
Protection DIN EN 60529	IP54, IP65
Operating speed	≤10000 rpm
Starting torque	≤0.025 Nm (IP 67)
Materials	Aluminium
Shaft diameter:	6, 8, 10, M6, M7 mm (other diameters on request)
Bearings lifetime:	$2x10^9$ rev. at 100% of full rated shaft load (minimum)
Operating temperature	-20...+85 °C
Storage temperature	-30 °C up to +90 °C
Weight approx.	350 g

Cable Wiring

Function	Color	Renk	Explanation
+VB	Brown	Kahve	Supply Voltage
GND	White	Beyaz	Ground
A	Green	Yeşil	A Channel
A'	Red	Kırmızı	A Inverted Channel
B	Yellow	Sarı	B Channel
B'	Pink	Pembe	B Inverted Channel
Z	Gray	Gri	Z Channel
Z'	Blue	Mavi	Z Inverted Channel
Shield	Black	Siyah	Shield

Pulse Diagram

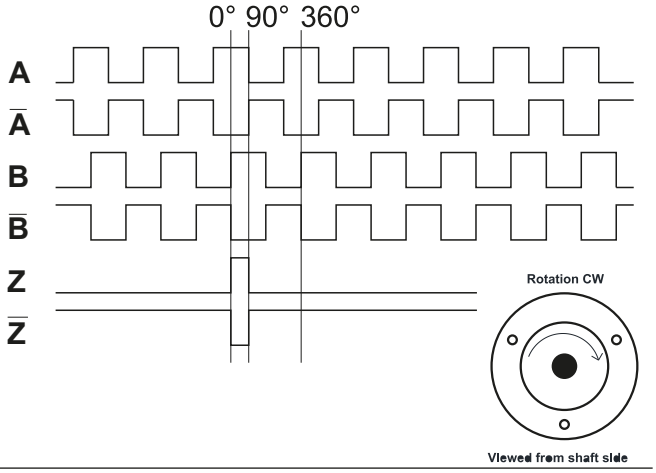

FNC MBI44 & MBI58 Series

Mechanical Dimensions

MBI44

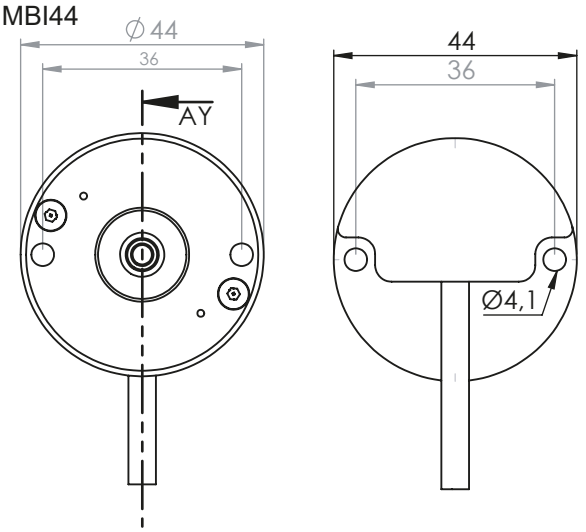

MBI58

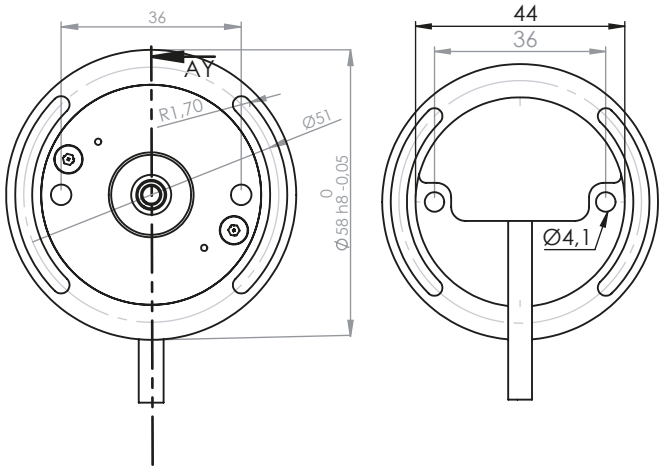

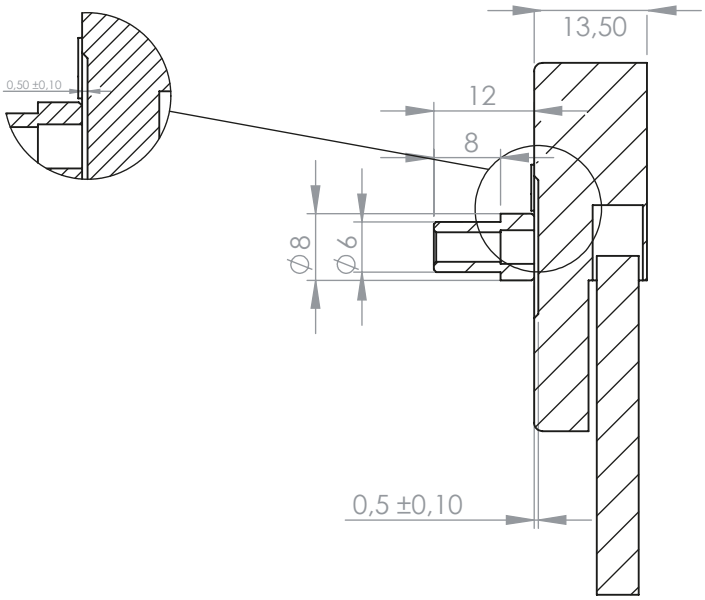

MHB10

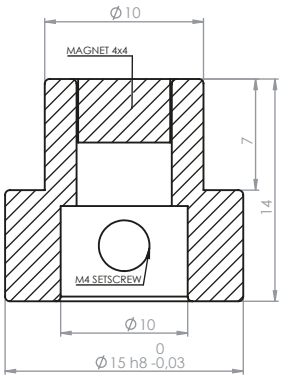

MHM04

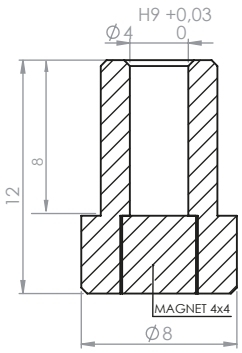

Encoder Part Number

FNC	MBI	44	6	30V	1024	–	R2

Housing:
44 : 44mm
58 : 58mm flange

Output Channels
1 : A
2 : AB
3 : ABZ
4 : AB+A' B'
6 : ABZ+A' B' Z'

Supply Voltage and output circuit :
5V : 5V in / out
245V : 5-30V in 5V out
30V : 5-30V in / out

Electrical Connections:
Cable
R2 : radial2m, shield not connected (standart)

PPR Options :
64 - 128 - 256 - 512 - 1024 - 2048 - 4096

Magnet Holder Part Number

MHB10 : Magnet Holder Big Version

MHM04 : Magnet Holder Medium Version

Linear & Bearingless encoders

Resolution 1...65536 pulses for Incremental Version
Resolution 8 to 18 bit for Absolute Version
SSI / BISS Interface

FNC MAR135 Series, Incremental & Absolute Axial

Features

- Off - Axis Incremental & Absolute rotary encoder
- Robust mechanical and electrical construction
- Corrosion resistant magnetic ring
- Outer diameter 135 mm
- Inner diameter 90 mm
- Up to 65.536 PPR max. for incremental rotary encoder
- Up to 18 bit for absolute rotary encoder
- <300 kHz frequency
- Magnetic system

Technical data

Voltage supply	4.75VDC to 30VDC 4.75VDC to 5.5VDC
Protection:	Output short circuit protection. Reverse polarity protection (except 5V version)
Consumption w/o load	≤60 mA (24 VDC)
Output circuit	Linedriver/RS422 Push-pull short-circuit proof
Dimensions (ring)	ø135 mm
Protection DIN EN 60529	IP54, IP65
Operating speed	≤10000 rpm
Materials	Ring: Stainless Steel
Operating / Storage temperature	-20...+85 °C / -30 °C ... +90 °C
Weight approx.	350 g
EMC Standards	EN 61000-6-2 /EN 6100-6-4
Approval	CE

Cable Wiring

Incremental Version

Function	Color
+VB	Brown
GND	White
A	Green
A'	Red
B	Yellow
B'	Pink
Z	Gray
Z'	Blue
U	Transparent
V	Orange
W	Black
shield	

Absolute Version

Function	Color
+VB	Brown
GND	White
Clock+	Blue
Clock-	Blue-black
Data+	Orange
Data-	Orange-black
Preset	Gray
shield	

Pulse Diagram for Absolute Version

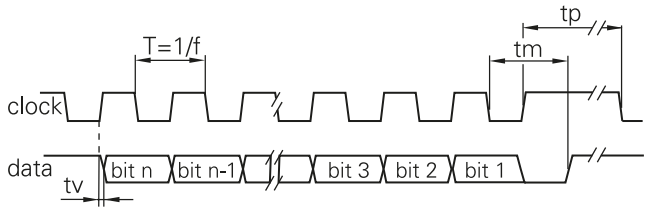

Clock frequency, f	50...2000 kHz for SSI up to 10MHz for BISS
Code	Binary or gray
Status and parity bit	On request
Monoflop time tm	>15µs
Clock time out	Programmable at factory

Pulse Diagram for Incremental Version

Clockwise rotating direction when looking at flange.

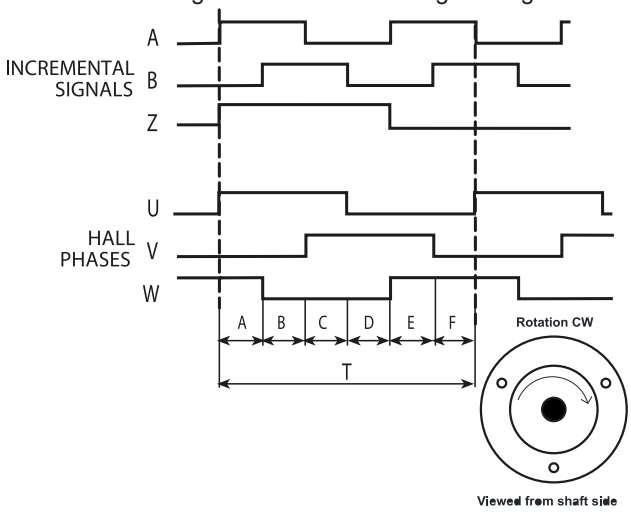

FNC MAR135 Series, Incremental & Absolute Axial

Mechanical Dimensions

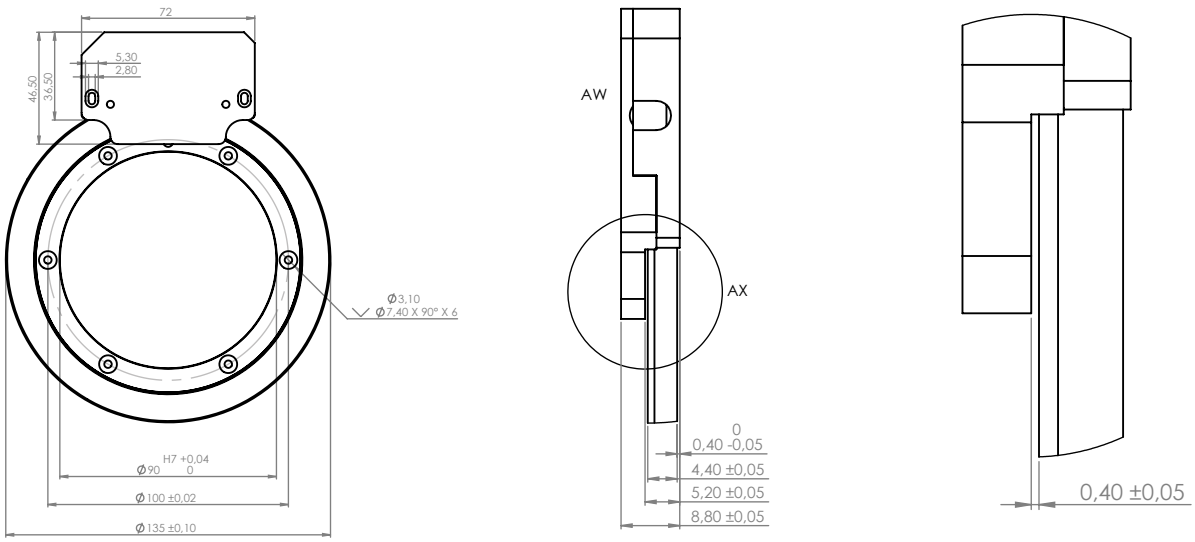

Encoder Part Number for Absolute Version

FNCA | P | 135 | 90 | S12 | 30V | B | – | R2

P : PCB
C : Cover

Housing:
135 : 135 mm

Shaft Diameter : 90 mm
others on request

S : single turn
8 ...18 bit

Electrical Connections:

Cable
R2 : radial 2m, shield not connected (standart)

B : Binary

Supply Voltage and output circuit :
5V : 5V in / out
245V : 5-30V in 5V out
30V : 5-30V in / out

Encoder Part Number for Incremental & Commutation Version

FNCI | P | 135 | 90 | 6 | 8P | 30V | 1024 | – | R2

P : PCB
C : Cover

Housing:
135 : 135 mm

Shaft Diameter : 90 mm
others on request

Output Channels
1 : A
2 : AB
3 : ABZ
4 : AB+A' B'
6 : ABZ+A' B' Z'

Electrical Connections:

Cable
R2 : radial 2m, shield not connected (standart)

PPR Options :

1 to 128 - 25 - 50 - 100 - 200 - 250 - 300 - 360 - 400 - 500 - 512 - 600 - 720 - 800 - 900 - 1000 - 1024 - 1250 - 1440 - 2000 - 2048 - 2500 - 3000 - 3600 - 4000 - 4096 - 5000 - 6000 - 8192 - 10000 - 12500 - 20000 - 25000 ... 65536

Supply Voltage and output circuit :
5V : 5V in / out
245V : 5-30V in 5V out
30V : 5-30V in / out

Pole Pairs
2P : 2 poles
4P : 4 poles
6P : 6 poles
8P : 8 poles
10P : 10 poles
12P : 12 poles
16P : 16 poles
Empty : without commutation, direct incremental

FEMAC Automation Control

Draw Wire Sensors

- Robustness
- Ergonomic Design

Motion Control Products

Fenac Draw-Wire Sensor

Length up to 1000 mm

FNC W55 Series

Features

- Measurement length up to 1000 mm
- Robust aluminium housing
- Very compact design
- Protection to IP54
- Wire-actuated ancoder for all rotary encoders with 58mm servo flange and different signal outputs
- Stainless steel wire
- Drum circumference is 125 mm
- Linearity is ~ ± 0,35 %

Technical data

Measuring range		0 - 1000mm
Resolution		customer spesific
Sensor element		Incremental, analog, absolute, CANopen etc.
Temperature range		20 °C ..... +80 °C
Material:	housing:	aluminium
	draw-wire:	7x7 pvc coated 304 stainless steel (Ø 0.8mm)
Wire acceleration		approx. 5g
Wire rectraction		approx. 1N
Wire extension		1,5N
Protection class		IP54
Max speed		2m/s

Part number

FNC W 55 – 1000

W: Draw wire sensor

1000 – Length:

600:	600mm
700:	700mm
800:	800 mm
900:	900 mm
1000:	1000mm

Mechanical dimensions

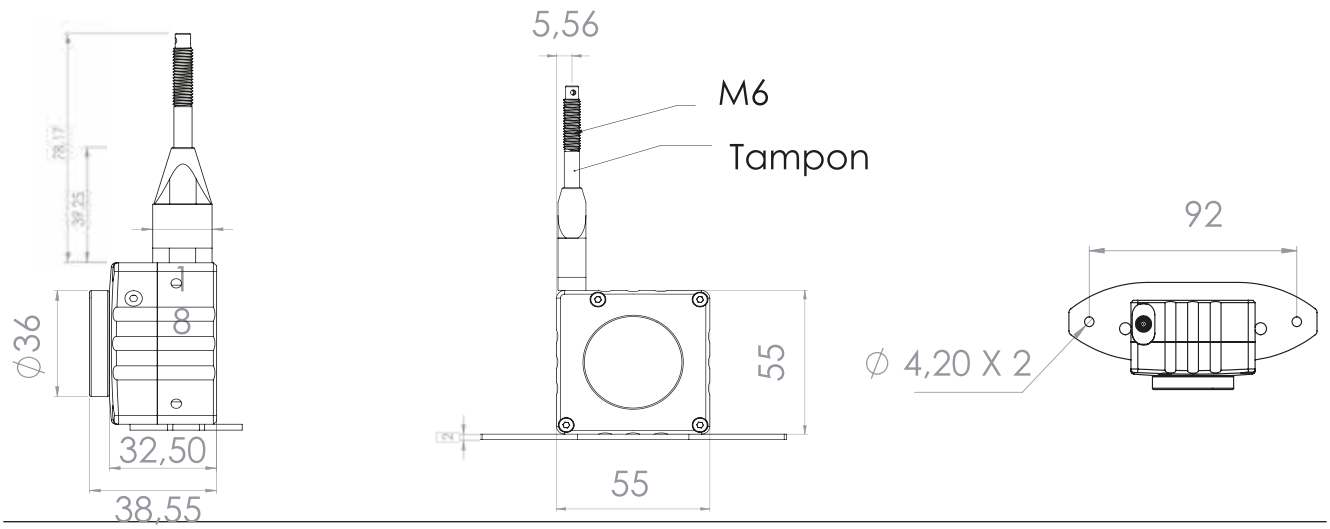

FNC W80 Series

Features

- Measurement length up to 5500mm
- Robust aluminium housing
- Very compact design
- Protection to IP54
- Wire-actuated ancoder for all rotary encoders with 58mm servo flange and different signal outputs
- Stainless steel wire
- Drum circumference is 200 mm
- Linearity is ~ ± 0,35 %

Technical data

Measuring range		0 - 5500mm
Resolution		customer spesific
Sensor element		Incremental, analog, absolute, CANopen etc.
Temperature range		20 °C ..... +80 °C
Material:	housing:	aluminium
	draw-wire:	7x7 pvc coated 304 stainless steel (Ø 0.8mm - 1 mm)
Wire acceleration		approx. 5g
Wire rectraction		approx. 1N
Wire extension		1,5N
Protection class		IP54
Max speed		2m/s

Part number

FNC W 80 – 5500

W: Draw wire sensor

Length:
1000 : 1000 mm
2000 : 2000 mm
3000 : 3000 mm
5500 : 5500 mm

Mechanical dimensions

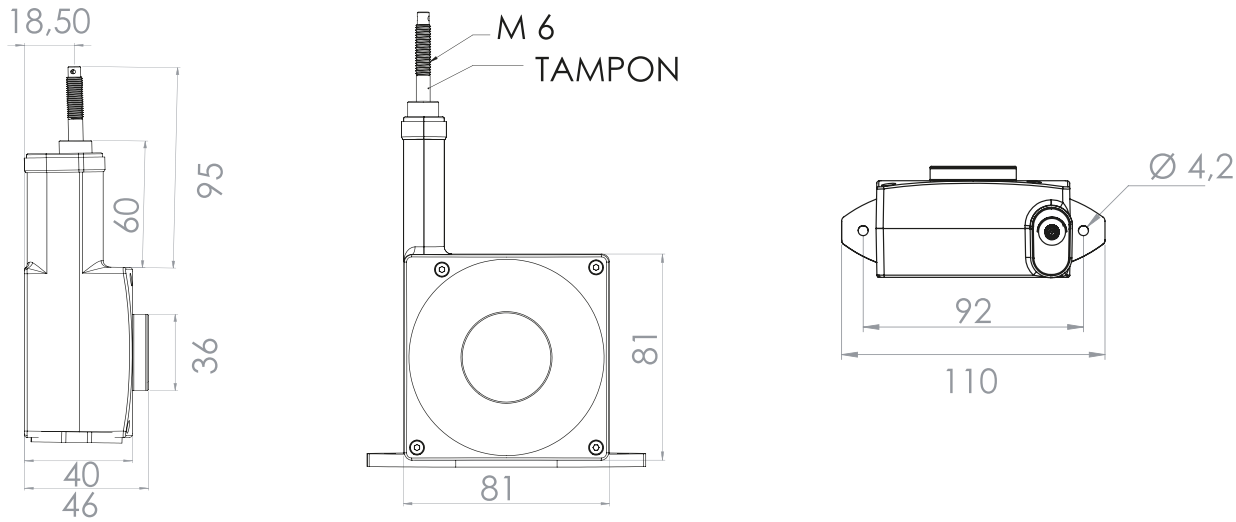

Fenac Draw-Wire Sensor

Length up to 10000 mm

FNC W100 Series

Features

- Measurement length up to 10000 mm
- Robust aluminium housing
- Very compact design
- Protection to IP54
- Wire-actuated ancoder for all rotary encoders with 58mm servo flange and different signal outputs
- Stainless steel wire
- Drum circumference is 250 mm
- Linearity is ~ ± 0,35 %

Technical data

Measuring range		0 - 10000mm
Resolution		customer spesific
Sensor element		Incremental, analog, absolute, CANopen etc.
Temperature range		20 °C ..... +80 °C
Material:	housing:	aluminium
	draw-wire:	7x7 pvc coated 304 stainless steel (Ø 1 mm)
Wire acceleration		approx. 5g
Wire rectraction		approx. 1N
Wire extension		1,5N
Protection class		IP54
Max speed		2m/s

Part number

FNC | W | 100 – 10000

W: Draw wire sensor

Length:

600: 600mm
700: 700mm
800: 800 mm
900: 900 mm
1000: 1000mm
...
10000: 10000mm

Mechanical dimensions

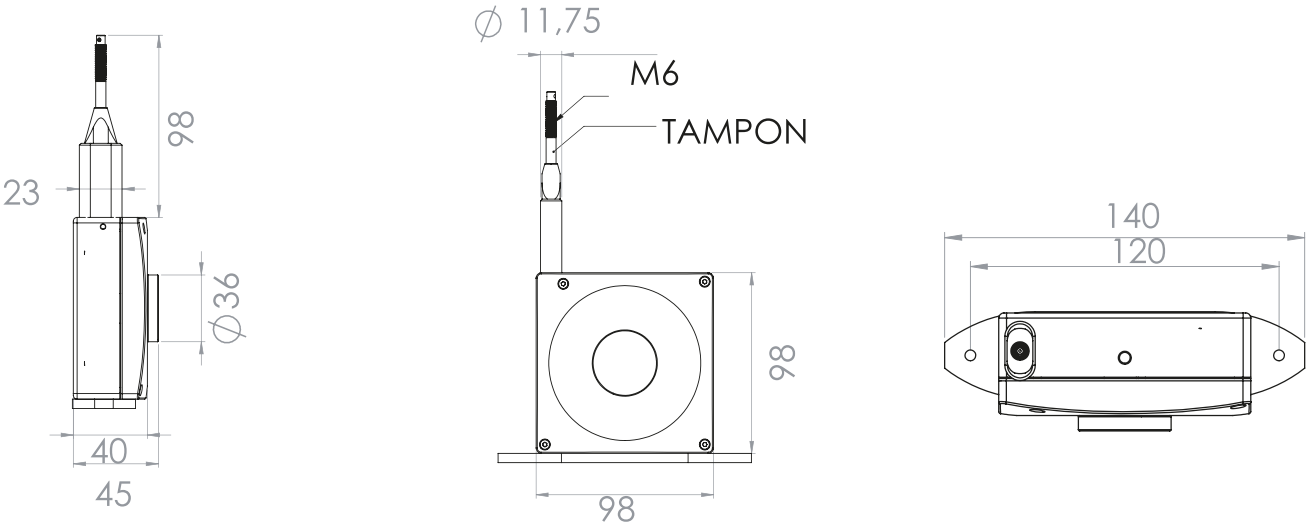

Fenac Draw-Wire Sensor

Length up to 15000 mm

FNC W115 Series

Features

- Measurement length up to 15000 mm
- Robust aluminium housing
- Very compact design
- Protection to IP54
- Wire-actuated ancoder for all rotary encoders with 58mm servo flange and different signal outputs
- Stainless steel wire
- Drum circumference is 300 mm
- Linearity is ~ ± 0,35 %

Technical data

Measuring range		0 - 15000mm
Resolution		customer spesific
Sensor element		Incremental, analog, absolute, CANopen etc.
Temperature range		20 °C ..... +80 °C
Material:	housing:	aluminium
	draw-wire:	7x7 pvc coated 304 stainless steel (Ø 1 mm)
Wire acceleration		approx. 5g
Wire rectraction		approx. 1N
Wire extension		1,5N
Protection class		IP54
Max speed		2m/s

Part number

FNC W 115 – 13500

W: Draw wire sensor

13500 – Length:

600: 600mm
700: 700mm
800: 800 mm
900: 900 mm
1000: 1000mm
...
15000: 15000mm

Mechanical dimensions

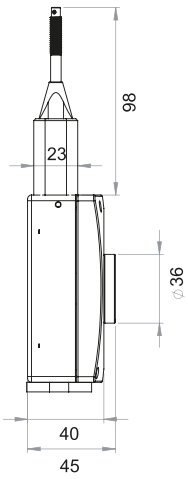

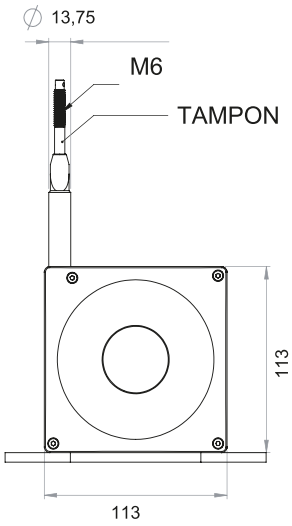

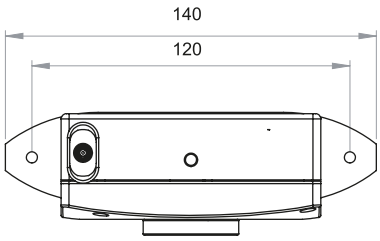

Fenac Draw-Wire Sensors

Length up to 20000 mm

FNC W120 Series

Features

- Measurement length up to 20000mm
- Robust aluminium housing
- Very compact design
- Protection to IP54
- Wire-actuated ancoder for all rotary encoders with 58mm servo flange and different signal outputs
- Stainless steel wire
- Drum circumference is 350 mm
- Linearity is ~ ± 0,35 %

Technical data

Measuring range		0 - 20000
Resolution		customer spesific
Sensor element		Incremental, analog, absolute, CANopen etc.
Temperature range		20 °C ..... +80 °C
Material:	housing:	aluminium
	draw-wire:	7x7 pvc coated 304 stainless steel (Ø 0.8mm - 1 mm)
Wire acceleration		approx. 5g
Wire rectraction		approx. 1N
Wire extension		1,5N
Protection class		IP54
Max speed		2m/s

Part number

FNC W 120 – 20000

W: Draw wire sensor

Length:

1000 : 1000 mm
2000 : 2000 mm
3000 : 3000 mm
5500 : 5500 mm
...
20000 : 20000 mm

Mechanical dimensions

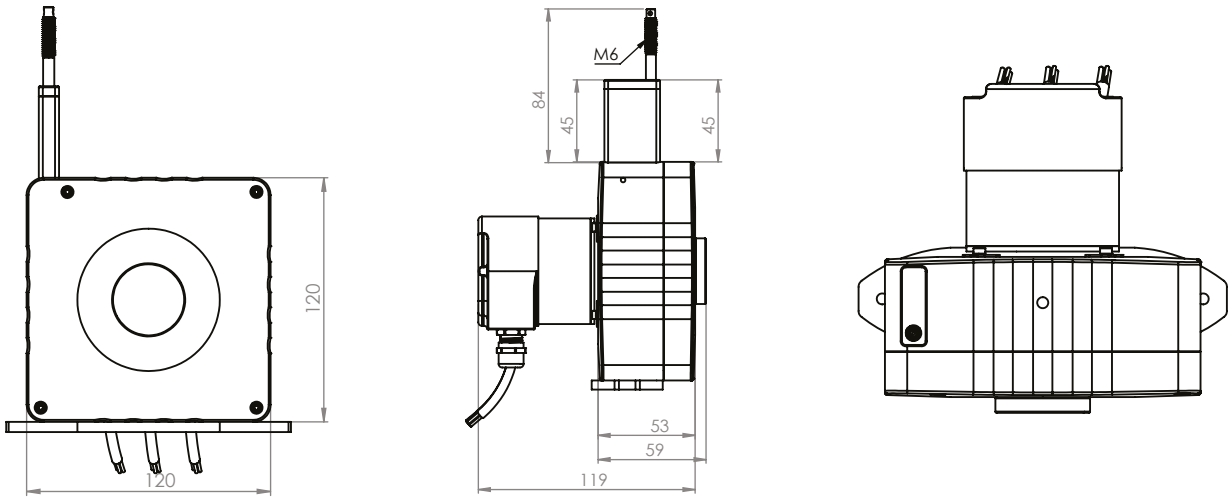

Wire Encoders Output Options

Mounting options

W110 + FNC 58S 6630V 1250 - R2

Wire length versus PPR

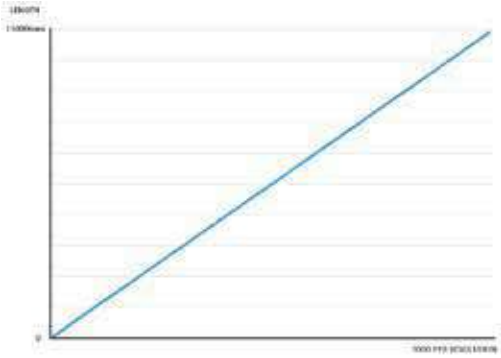

W115 + FNCPAA5 58S 6 M4 V1 30V - R2

Wire length versus voltage or current

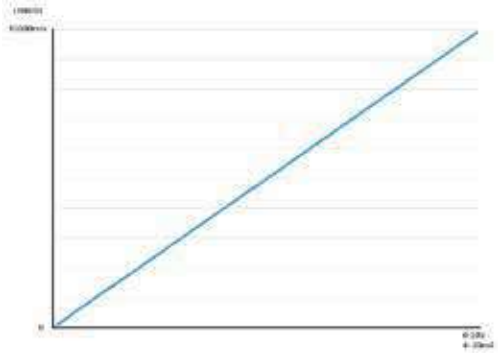

W115 + FNC AP 58S 6 S12M12 30V B BCC

Wire length versus can or profibus position data

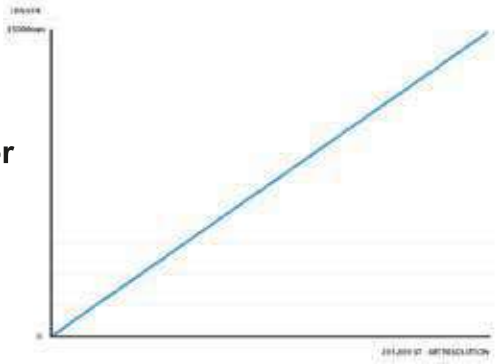

W115 + FNC AS 58S 6 S12 30V B -R2

Wire length versus SSI position data

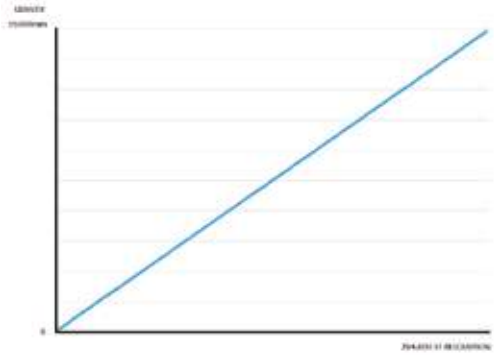

Wire Units User Manuel

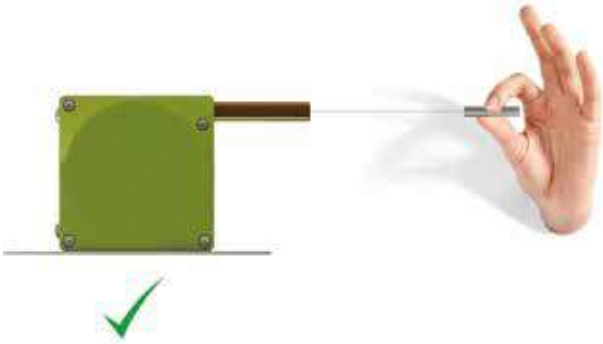

Never allow the measurement cable to retract in an uncontrolled manner. Releasing a tensioned cable will break the device. Risk of injury!

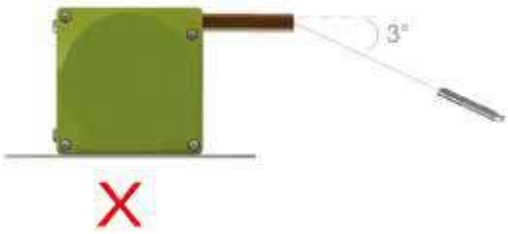

An extension angle of up to 3° is possible but not recommended. The service life may be reduced.

Extending the cable in a straight line is ideal. This can be achieved with a guide pulley if necessary.

If there is no risk of ice forming on the measurement cable, then the cable outlet can be positioned horizontally. However, the cable outlet should be mounted at the bottom.

If there is a risk of ice forming on the measurement cable, a guide pulley must be used in order to break up the ice. The cable outlet must always face downward. This arrangement is always preferable wherever moisture or dust may accumulate on the measurement cable.

FENAC Automation Control

Textile Solutions

- **Fast Solution**
- **Fast Replacement**
- **Easy Maintenance**

Motion Control Products

Incremental encoders

Resolution 1...65.536 pulses

FNC 58S 81 Series

Direct replacement to 1XP8001-1 and 1XP8001-2

Features

- **Industry 58 mm standart size, servo flange**
- **Robust mechanical and electrical construction**
- **Protection to IP67**
- **Up to 65.536 PPR max.**
- **<300 kHz frequency**
- **Special shaft design**

PPR Options :

1 to 128 - 25 - 50 - 100 - 200 - 250 - 300 - 360 - 400 - 500 - 512 - 600 - 720 - 800 - 900 - 1000 - 1024 - 1250 - 1440 - 2000 - 2048 - 2500 - 3000 - 3600 - 4000 - 4096 - 5000 - 6000 - 8192 - 10000 - 12500 - 16384 - 20000 - 25000

Technical data - electrical ratings

Voltage supply	4.75VDC to 30VDC 4.75VDC to 5.5VDC
Protection:	Output short circuit protection. Reverse polarity protection (except 5V version)
Consumption w/o load	≤60 mA (24 VDC)
Resolution (steps/turn)	1...25.000
Reference signal	Zero pulse, width 90° 180°, 360° optional
Optoelectronic life time	100.000 (min)
Output frequency	>200 kHz
Output signals	90° shifted A and B, Z + inverted
Output circuit	Linedriver/RS422 Push-pull short-circuit proof
Interference immunity	DIN EN 61000-6-2
Emitted interference	DIN EN 61000-6-4
Approval	CE

Technical data - mechanical design

Dimensions (flange)	ø58 mm
Shaft loading	≤120 N axial ≤200 N radial
Protection DIN EN 60529	IP 67
Operating speed	≤10000 rpm
Starting torque	≤0.025 Nm (IP 67)
Materials	Housing: Aluminium Flange: Aluminium Shaft : Stainless steel
Shaft diameter:	6, 8, 10, 12 mm (other diameters on request)
Bearings lifetime:	$2x10^9$ rev. at 100% of full rated shaft load (minimum)
Operating temperature	-20...+85 °C
Storage temperature	-30 °C up to +90 °C
Weight approx.	200 g

Accessories

Connectors and cables
CRM2312R M23 12 poles female connector or see page 206

Mounting coupling
PF260808 plastic or see page 204

Mounting accessories
ASTK spring or see page 202-203

FNC 58S 81 Series

Mechanical Dimensions

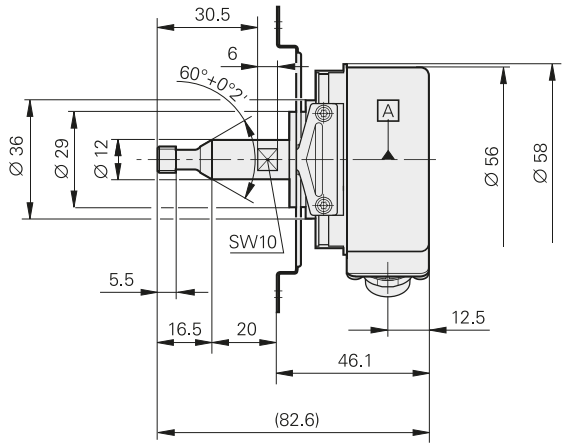

Pulse Diagram

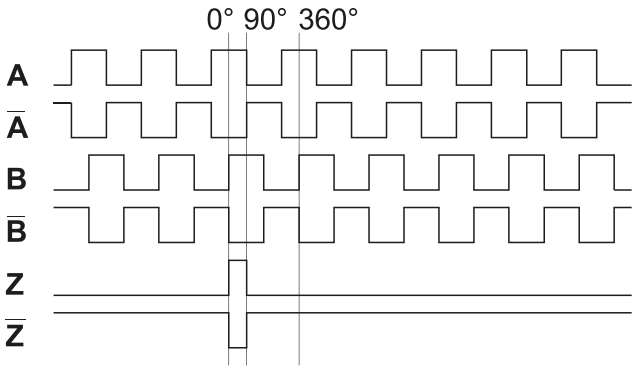

Encoder Part Number

FNC 58S81-1 / Up = 10 ... 30V

FNC 58S81-2 / Up = 5V ± 10%

Absolute encoders

Absolute Parallel + İncremental

Special Design for textile industry
Special design for Smit Sulzer machines

FNC 58B PAR

Features

- **Industry 58 mm standart size, clamping flange**
- **Robust mechanical and electrical construction**
- **Protection to IP67**
- **<1 MHz frequency**
- **Up to 10 bit parallel output**
- **Up to 65.536 PPR incremental output**
- **Optional strobe output for parallel output**
- **Optional direction change input**

PPR Options :

1 to 65.536

Technical data - electrical ratings

Voltage supply	5VDC to 30VDC
Protection:	Output short circuit protection. Reverse polarity protection (except 5V version)
Consumption w/o load	≤150 mA (24 VDC)
Resolution (steps/turn)	1...65.536
Reference signal	Zero pulse, width 90° 180°, 360° optional
Optoelectronic life time	100.000 (min)
Output frequency	<1 MHz
Output signals	90° shifted A and B, Z + inverted
Output circuit	Linedriver/RS422 Push-pull short-circuit proof
Interference immunity	DIN EN 61000-6-2
Emitted interference	DIN EN 61000-6-4
Approval	CE

Technical data - mechanical design

Dimensions (flange)	Customer specific design
Shaft loading	≤140 N axial ≤240 N radial
Protection DIN EN 60529	IP 67
Operating speed	≤10000 rpm
Starting torque	≤0.025 Nm (IP 67)
Materials	Housing: Aluminium Flange: Aluminium Shaft : Stainless steel
Shaft diameter:	6, 8, 10, 12 mm (other diameters on request)
Bearings lifetime:	$2x10^9$ rev. at 100% of full rated shaft load (minimum)
Operating temperature	-20...+85 °C
Storage temperature	-30 °C up to +90 °C
Weight approx.	350 g

Accessories

Connectors and cables
CRM2312 M23 12 poles female connector or see page 206

Mounting coupling
PF481010 plastic or see page 204

Mounting accessories
SF58B square flange or see page 202-203

FNC 58B PAR

Mechanical Dimensions

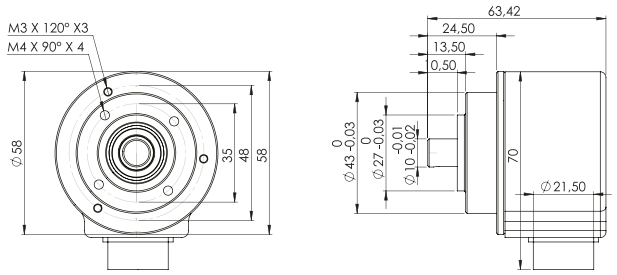

Pulse Diagram

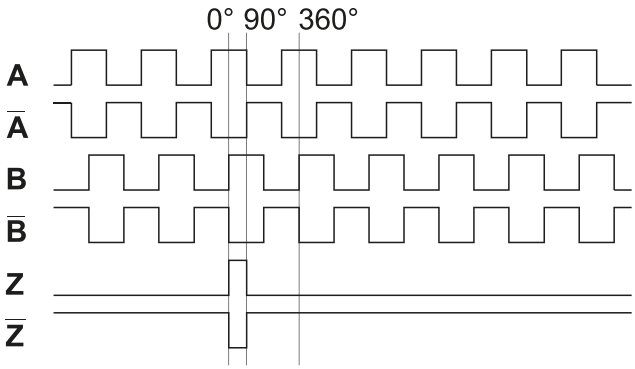

Connector Wiring

Connector Type	+Vcc	GND	A	A'	B	B'	Z	Z'	Shield
CRM1204	1	2	3		4				o.r.
CRM1205	1	2	3		4		5		o.r.
CRM1208	1	2	3	6	4	7	5	8	o.r.
CRM1212	1	2	3	6	4	7	5	8	o.r.
CRM1607	1	2	3		4		5		o.r.
CRM1614	Customer Specific								o.r.
CRM2312R	2-12	10-11	5	6	8	1	3	4	o.r.
CRM2312L	2-12	10-11	5	6	8	1	3	4	o.r.

For further information please see page 206

Cable Wiring

Function	Color	Renk	Explanation
+VB	Brown	Kahve	Supply Voltage
GND	White	Beyaz	Ground
A	Green	Yeşil	A Channel
A'	Red	Kırmızı	A Inverted Channel
B	Yellow	Sarı	B Channel
B'	Pink	Pembe	B Inverted Channel
Z	Gray	Gri	Z Channel
Z'	Blue	Mavi	Z Inverted Channel
Shield	Black	Siyah	Shield

Encoder Part Number

FNC 58B - PAR

FNC 58E 100 BHF Series

Special Design for textile industry
Special Design for Reiter machines

Features

- **Industry 58 mm standart size, end hollow shaft**
- **Robust mechanical and electrical construction**
- **Protection to IP67**
- **100 or 200 PPR options**
- **<300 kHz frequency**

PPR Options :

100 PPR
200 PPR

Technical data - electrical ratings

Voltage supply	4.75VDC to 30VDC 4.75VDC to 5.5VDC
Protection:	Output short circuit protection. Reverse polarity protection (except 5V version)
Consumption w/o load	≤60 mA (24 VDC)
Resolution (steps/turn)	1...25.000
Reference signal	Zero pulse, width 90° 180°, 360° optional
Optoelectronic life time	100.000 (min)
Output frequency	>200 kHz
Output signals	90° shifted A and B, Z + inverted
Output circuit	Linedriver/RS422 Push-pull short-circuit proof
Interference immunity	DIN EN 61000-6-2
Emitted interference	DIN EN 61000-6-4
Approval	CE

Technical data - mechanical design

Dimensions (flange)	ø58 mm
Shaft loading	≤140 N axial ≤240 N radial
Protection DIN EN 60529	IP 67
Operating speed	≤10000 rpm
Starting torque	≤0.025 Nm (IP 67)
Materials	Housing: Aluminium Flange: Aluminium Shaft : Stainless steel
Shaft diameter:	6, 8, 10, 12, 14, 15, 16 mm (other diameters on request)
Bearings lifetime:	$2x10^9$ rev. at 100% of full rated shaft load (minimum)
Operating temperature	-20...+85 °C
Storage temperature	-30 °C up to +90 °C
Weight approx.	250 g

Accessories

Connectors and cables
CRM1607 M16 7 poles female connector or see page 206

Mounting coupling
See page 204

Mounting accessories
NGL spring or see page 202-203

FNC 58E 100 BHF Series

Mechanical Dimensions

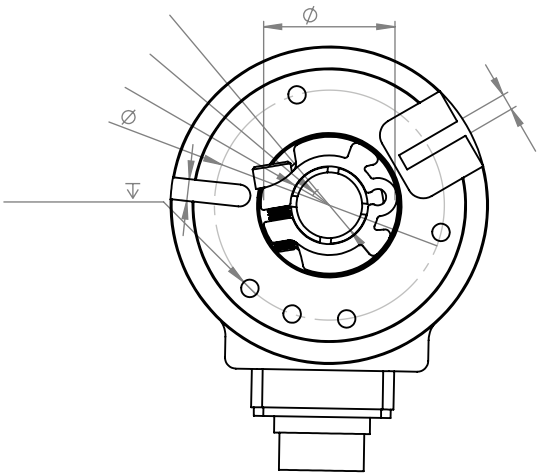

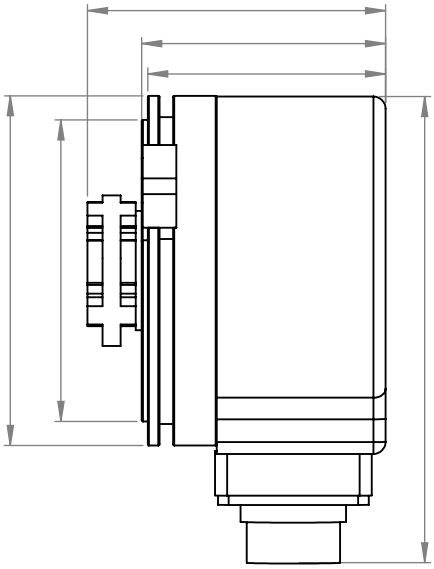

Pulse Diagram

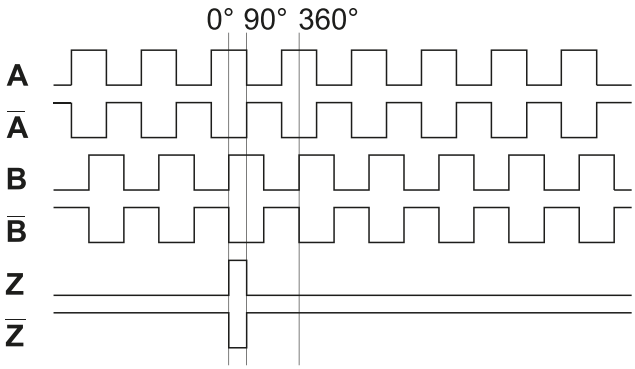

Encoder Part Number

Option 1

FNC	58	E	100	BHF

Option 2

FNC	58	E	200	BHF

FNC TR Series

Special Design for textile industry
Special Design for Reiter machines

Features

- **Industry 58 mm standart size, end hollow shaft**
- **Robust mechanical and electrical construction**
- **Protection to IP67**
- **100 or 200 PPR options**
- **<300 kHz frequency**

PPR Options :

1024 PPR, 2048 PPR, 4096 PPR

Technical data - electrical ratings

Voltage supply	4.75VDC to 30VDC 4.75VDC to 5.5VDC
Protection:	Output short circuit protection. Reverse polarity protection (except 5V version)
Consumption w/o load	≤60 mA (24 VDC)
Resolution (steps/turn)	1...25.000
Reference signal	Zero pulse, width 90° 180°, 360° optional
Optoelectronic life time	100.000 (min)
Output frequency	>200 kHz
Output signals	90° shifted A and B, Z + inverted
Output circuit	Linedriver/RS422 Push-pull short-circuit proof
Interference immunity	DIN EN 61000-6-2
Emitted interference	DIN EN 61000-6-4
Approval	CE

Technical data - mechanical design

Dimensions (flange)	ø58 mm
Shaft loading	≤140 N axial ≤240 N radial
Protection DIN EN 60529	IP 67
Operating speed	≤10000 rpm
Starting torque	≤0.025 Nm (IP 67)
Materials	Housing: Aluminium Flange: Aluminium Shaft : Stainless steel
Shaft diameter:	6, 8, 10, 12, 14, 15, 16 mm (other diameters on request)
Bearings lifetime:	$2x10^9$ rev. at 100% of full rated shaft load (minimum)
Operating temperature	-20...+85 °C
Storage temperature	-30 °C up to +90 °C
Weight approx.	370 g

Accessories

Connectors and cables
CRM1607 M16 7 poles female connector or see page 206

Mounting coupling
See page 204

Mounting accessories
See page 202-203

Mechanical Dimensions

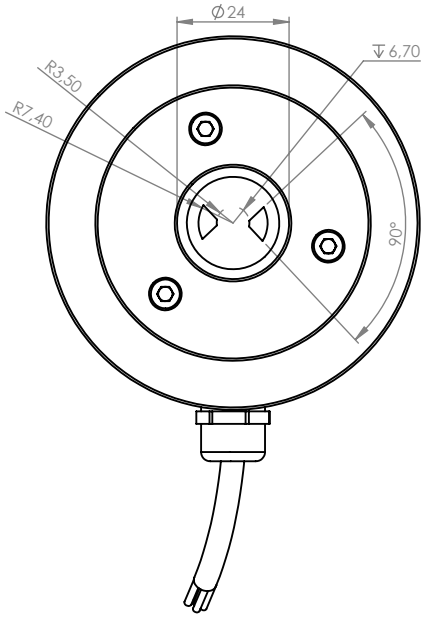

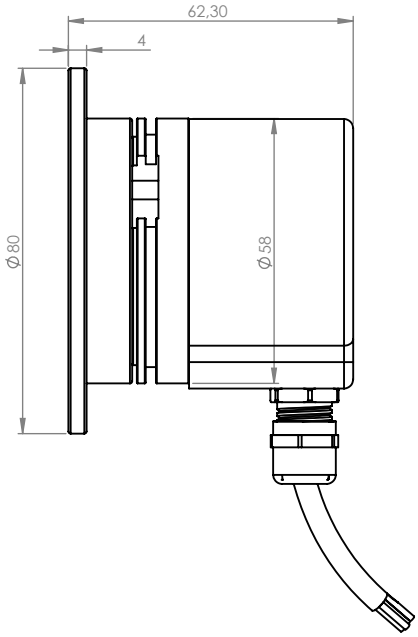

Pulse Diagram

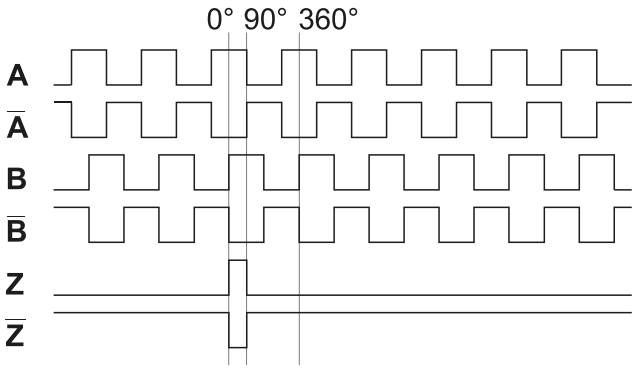

Encoder Part Number

Option 1

FNC	TR245V	1024

Option 2

FNC	TR245V	2048

Option 3

FNC	TR245V	4096

FENAC Automation Control

Rotary Potantiometers

- Simple
- Accurate
- Trusty

Motion Control Products

FNC FRPS 30 Series

Features

- **Hollow shaft**
- **Better then 0.1° resolution**
- **Linearity up to ±0.25 %**
- **Long lifetime**
- **Robust**

Technical data - electrical ratings

Total Resistance	5 or 10 kΩ
Interface	Analog output
Resistance tolerance	±%20
Linearity	up to ±0.25%
Electrical travel range	45, 150, 350

Technical data - mechanical design

Dimensions	Ø31mm Thickness: 18 mm
Materials	Housing : Aluminium Shaft :Aluminium
Shaft diameter:	6 mm

Output Functions

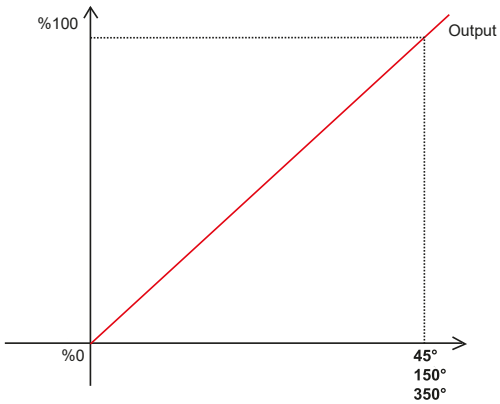

Cable Wiring / Connector

Function	Color	Renk
+VB	Red	Kırmızı
GND	Black	Siyah
Out	Yellow	Sarı

Part Number

FRPS | **30** | **05** | **K5** | **M** | **150**

- **30** — **Outer Diameter**
- **05** — **Inner Diameter :** 4, 5, 6, 8
- **K5** — **Resistance**
  K1: 1 k Ω
  K5: 5 k Ω
  K10: 10 k Ω
- **M** — **M:** Metal Housing
  P: Plastic Housing
- **150** — **Electrical Angle**
  45: 45°
  150: 150°
  350: 350°

Mechanical Dimensions

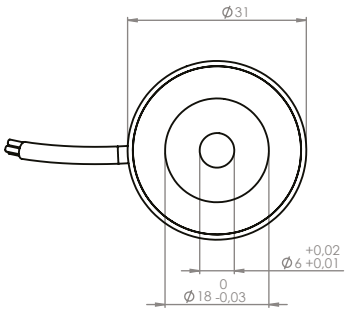

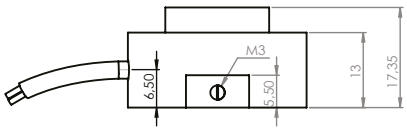

FNC FRPK Series

Features

- **Hollow shaft**
- **Better then 0.1° resolution**
- **Linearity up to ±0.25 %**
- **Long lifetime**
- **Robust**
- **With 2 mounting holes ar diameter D: 38 mm**

Technical data - electrical ratings

Total Resistance	5 or 10 kΩ
Interface	Analog output
Resistance tolerance	±%20
Linearity	up to ±0.25%
Electrical travel range	45, 150, 350

Technical data - mechanical design

Dimensions	Ø 31mm Thickness: 18 mm
Materials	Housing : Aluminium Shaft :Aluminium
Shaft diameter:	6 mm

Output Functions

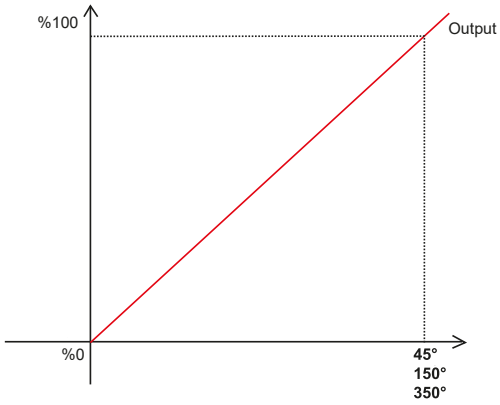

Cable Wiring / Connector

Function	Color	Renk
+VB	Red	Kırmızı
GND	Black	Siyah
Out	Yellow	Sarı

Part Number

FRPK **30** **05** **K5** **P** **150**

- **30**: Outer Diameter
- **05**: Inner Diameter : 4, 5, 6, 8
- **K5**: Resistance
  - **K1:** 1 k Ω
  - **K5:** 5 k Ω
  - **K10:** 10 k Ω
- **P**:
  - **M:** Metal Housing
  - **P:** Plastic Housing
- **150**: Electrical Angle
  - **45:** 45°
  - **150:** 150°
  - **350:** 350°

Mechanical Dimensions

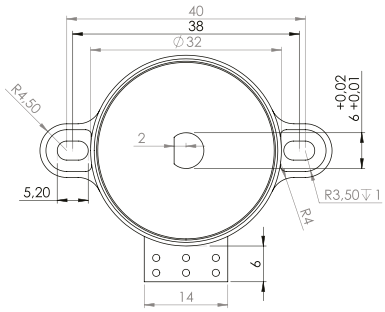

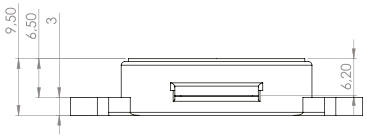

FNC MTP Series

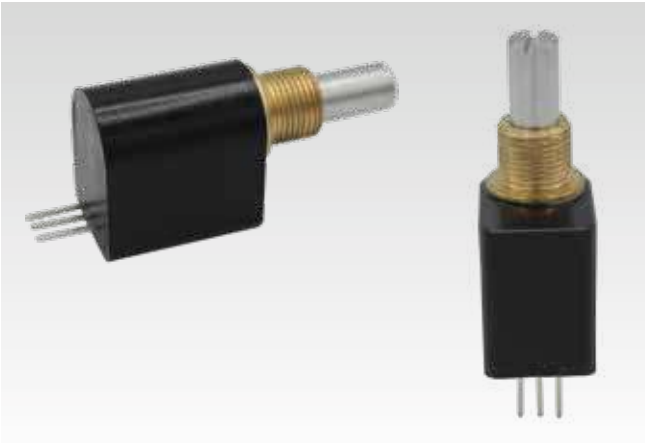

Features

- **Non contact magnetic sensing**
- **Resolution: 12 bit**
- **Robust redundancy option**
- **Highly resistance to fuild / dust ingress**

Technical data - electrical ratings

Voltage supply	5V ± %10 DC 3.3V ± % 10 DC
Protection:	Reverse & over voltage Output short circuit
Consumption w/o load	≤15 mA ≤30 mA for redundancy
Interface	Ratiometric analog output
Resolution (steps/turn)	12 bit
Linearity	≤ ±%1
Sensor life time	≥ 50.000.000 cycles
Approval	CE

Technical data - mechanical design

Protection	IP 69K
Operating speed	≤180 rpm (Speed can be increase after inital development test)
Materials	Housing : Delrin Shaft :Stainless steel
Shaft diameter:	6 mm
Operating temperature	-40 to +125 °C
Weight approx.	20 g ± %5

Part Number

FNC	MTP	10	5

Turn
10: 10 Turn
15: 15 Turn

5: 5V
3: 3.3V

Output Functions

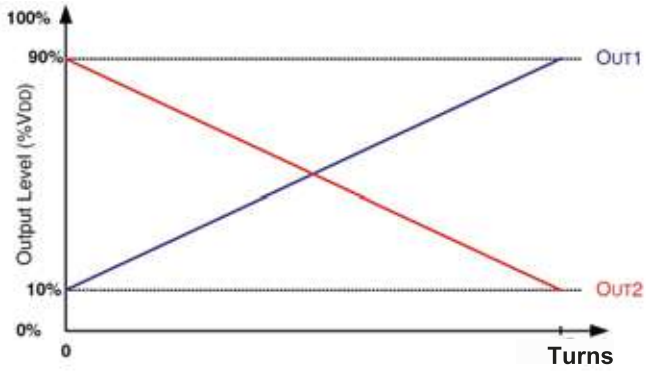

Cable Wiring / Connector

Function	Pin
+VB	3
GND	1
Out	2

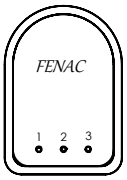

Mechanical Dimensions

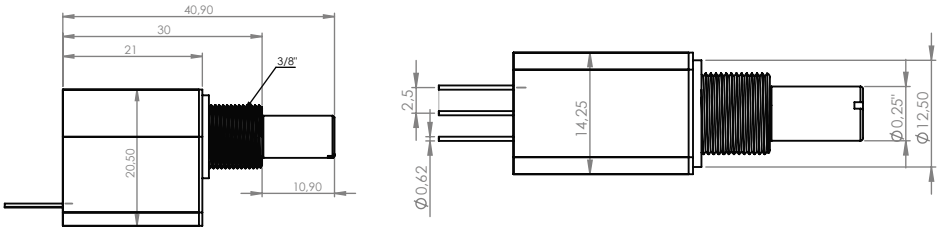

FENAC Automation Control

Door detectors

- Sensitive
- Reliable

Motion Control Products

FNC DD 36 Series

Features

- **Extremely dense protective field**
- **Wide operation range**
- **Robust and reliable**
- **Simple Mounting**
- **Vitually no alignment necessary**
- **Wide power supply range**

Technical data - Door Detector

Dimensions	12 x 30 x 2000 mm
Detection range	0 – 4000 mm
Number of beams	172 Non-Parallel
Number of diodes	36
Detection height	1600 mm
Response time	300 ms
Power consumption	< 4W
Output	Relay, 1NO - 1NC
Power supply	220 VAC
Operating temperature	-20...+65° C
Stroge temperature	-20...+85° C
Power indicator	Red LED
Status indicator	LED in reciever Green on : working normal Red on : Fault
Light immunity	<100.000 Lux
Tolerance	Vertical : ± 15 mm (7°) Horizantal : ± 3 mm (5°)
Cables lenght (TX&RX)	4200 mm
Protection degree	IP54

Technical data - Power Unit

Dimensions	30 x 57 x 133 mm
Operating voltage	85–230 VAC ±% 15 60 Hz 24 VDC ± %15
Housing material	IP54, IP65
Contact ratings	3A - 120 VAC 1A - 250 VAC 24 VDC
Switching current	max. 5A
Operating temperature	-20...+65° C
Stroge temperature	-20...+85° C
Protection level	IP31
Isolation	> 2000V
Relay life expectancy	operation 100.000

FNC DD 36 Series

Mechanical Dimensions

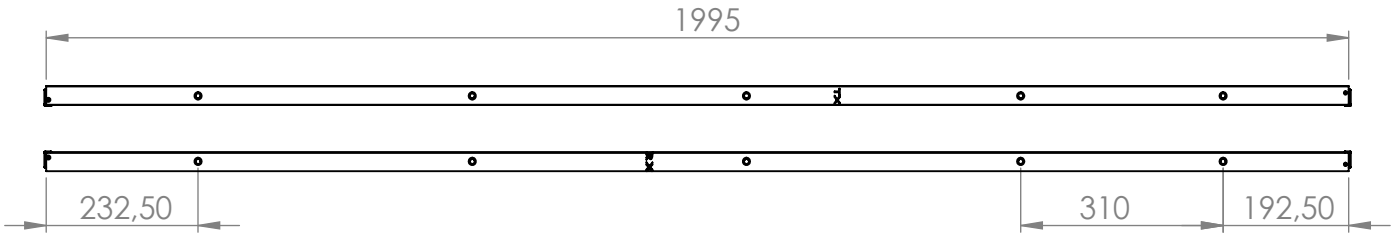

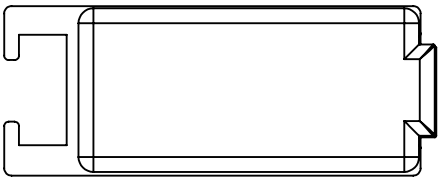

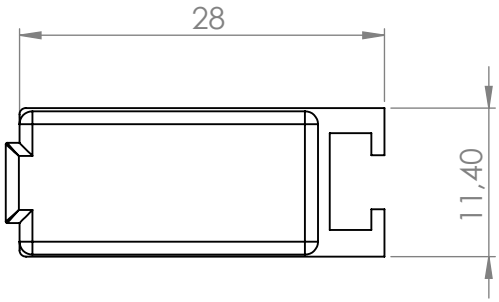

Door Detector Part Number

FNC | DD | 36 | P3 | K

Product Series:
DD : Door Detector

Number of Diodes
36: 36 Diodes, 172 Non-parallel Beams

Connector
K : DIN 5 pin output

Output Channels
P3 :

Power Unit Part Number

FNC | DDPU | 220 | K

Product Series:
DDPU : Door Detector Power Unit

Number of Diodes
220 : 85 to 265 VAC
24 : 24 VDC

Connector
K : DIN 5 pin output

FNC Diffuse Sensor

Features

- **The operating distance can be set to the optimal value**
- **Configurable dark or light mode**
- **PNP/NPN open collector or relay output**
- **Compact design**

Mechanical Dimensions

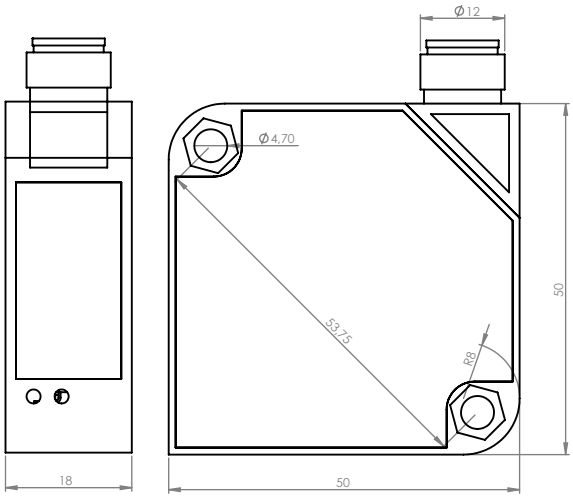

Technical data - mechanical design

Voltage Supply	10VDC to 30VDC (dc vers.) 30VAC to 260VAC (ac vers.)
Consumption w/o load	≤30 mA VDC (dc vers.) ≤40 mA VAC (ac vers.)
Light emission	infrared LED 940 nm
Diffuse proximity operating distance	5 - 200 cm
Settings	Red LED (output LED)
Output type	relay 250V / 3A (ac vers.) PNP / NPN open Collector
Response time	30 ms max.
Operating mode	darklight configurable
Connection	Cable length : 2m 5 x 0,22
Dimensions	50 x 50 x 18 mm
Protection DIN EN 60529	IP65
Materials	Housing : ABS Lens : PMMA plastics
Operating temperature	-25...+65 °C
Storage temperature	-25 °C up to +70 °C
Weight approx.	160 g with cable

Part Number

FNC DS 20 D 200 R 1

Housing:
20 : 20mm

Sensor Type:
D Dif
R Reflective Sensor
T

Sensing Distance : 80, 100, 200, 500 cm
Other dimensions on request

Output Types :
R : Relay
N : NPN output
P : output

Electrical Connections:
Cable
1 : PVC 5 x 0.25 Cable
Connector:
2 : M12 5 pin male connector

Cable Wiring

DC Version

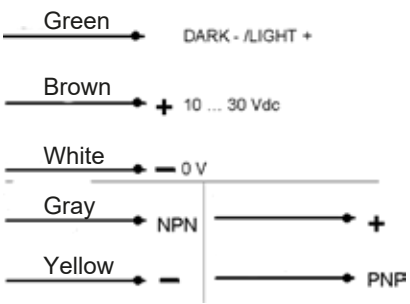

AC Version

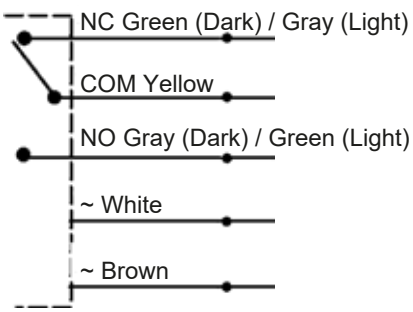

FNC Laser Distance Sensor

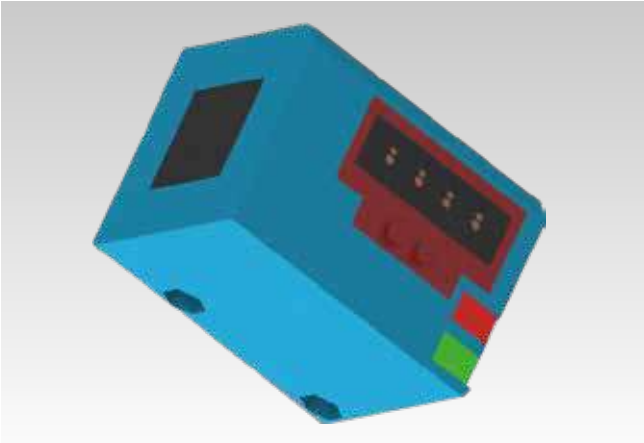

Features

- Reliable optical distance measurement with long range up to 10 meters
- Operation up to 200 klux ambient light immunity measurement
- High accuracy (%1)
- Scalable measuring range and window function
- Two switching outputs, one of them is programmable
- Easy integration
- High repeatibility

Mechanical Dimensions

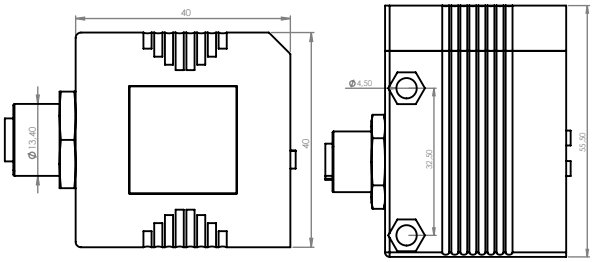

Technical data - electrical ratings

Voltage Supply	18VDC to 30VDC
Consumption w/o load	≤200 mA VDC
Light emission	650 nm visible red
Ambient light immunity	200 klux
Measuring range	10 mm - 10 meter
Sample rates	1 ... 50 Hz
Measuring accuracy	%1
Digital output	1 or 2 PNP / NPN / Push pull
Analog current output	4 ... 20 mA
Analog voltage output	0 ... 10V
Display	Switching status : LED Yellow Power : LED Green Distance & prog. : 4-digit
Connector	1xM12

Cable Wiring

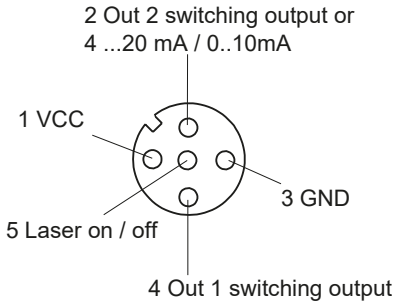

Technical data - mechanical design

Dimensions	59 x 42 x 52
Housing	rectangular
Protection DIN EN 60529	IP65
Materials	Housing : aluminium Lens : glass Window : Gorilla glass
Operating temperature	-10...+55 °C
Storage temperature	-25 °C up to +70 °C
Weight approx.	300 g

Part Number

FNC	LDS	40	D	1000	C1	M12

LDS :

Housing:
40 : 40mm

Sensor Type:
D : Diffused Sensor

Sensing Distance : 1 - 1000 cm
Other dimensions on request

Output Types :
A1 : 4 - 20 mA / 0 - 10 V
D1 : 1 x NPN Output
D2 : 2 x NPN Output

Electrical Connections:
Connector:
M12 : M12 5 pin male connector

RESET
Enable
Switch
OFF
X1
X10
X100
10
30
40

FENAC Automation Control

Hand encoders

- **Manuel**
- **Easy**

Motion Control Products

FNC EL and ELT hand encoders

FNC EL 100

Features

- Manuel puls encoder
- 60mm, 80mm diameter housing
- 100PPR option
- Voltage output or LD output
- Operating temperature : -10...+80 °C
- Weight : 250 g
- Normal rotational speed : max 200 r / min
- Current consumption : max 60mA
- Frequency responce : 5kHz

Dimensions

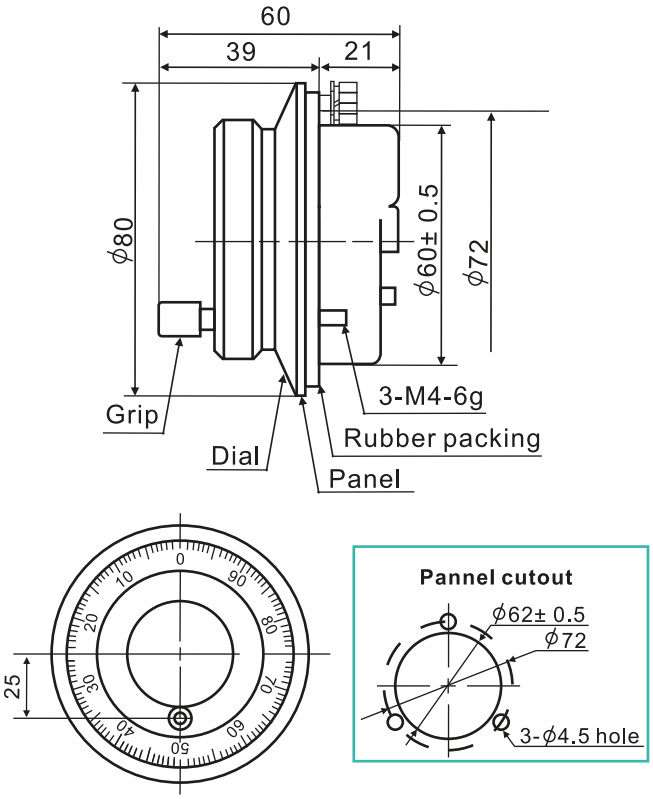

FNC ELT 100

Features

- Hand held manuel puls encoder
  - Axis select switch
  - Rate override switch
  - Reset switch
- 100PPR option
- Voltage output or LD output
- Operating temperature : -10...+80 °C
- Weight : 450 g
- Normal rotational speed : max 200 r / min
- Current consumption : max 60mA
- Frequency responce : 5kHz

Dimensions

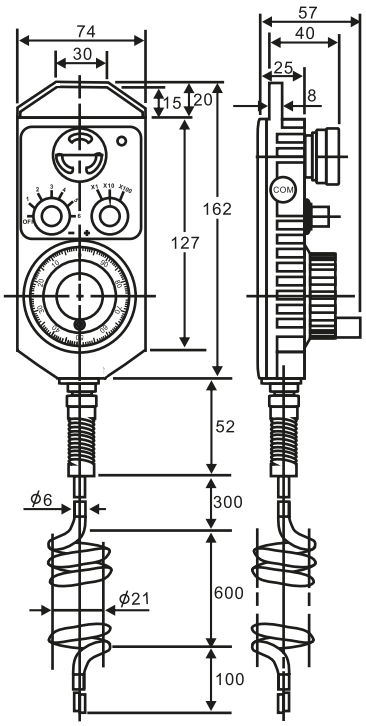

Connection

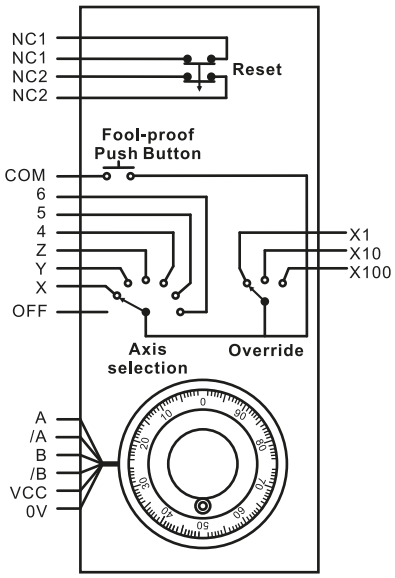

FENAC Automation Control

Accessories

- Comfort
- Flexibility

Motion Control Products

Torque supports

Encoder mounting attachments	Fixing components for hollow shaft encoders

Order Code : YY UV

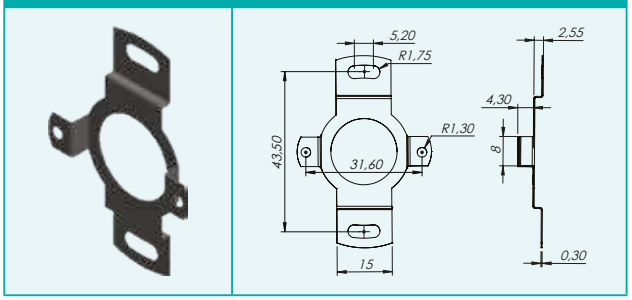

Order Code : YY AKR3

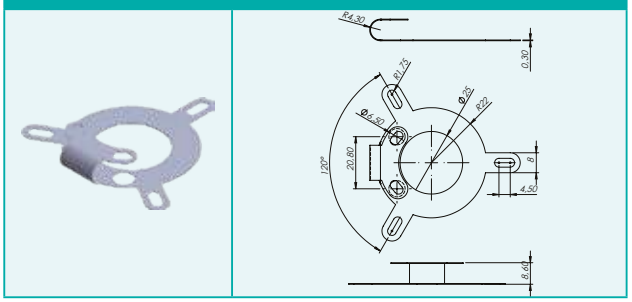

Order Code : YY AKS

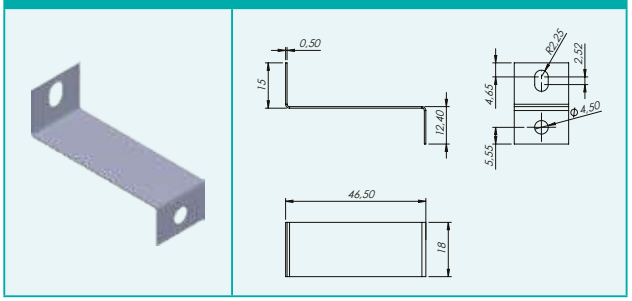

Order Code : YY RST

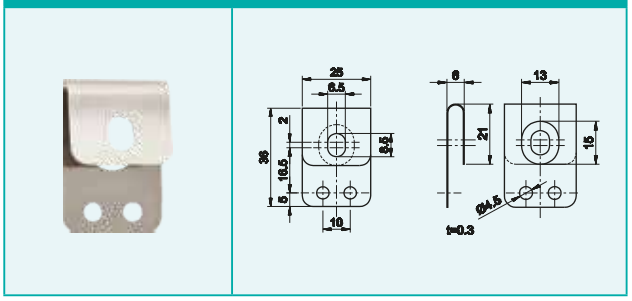

Order Code : YY SCR

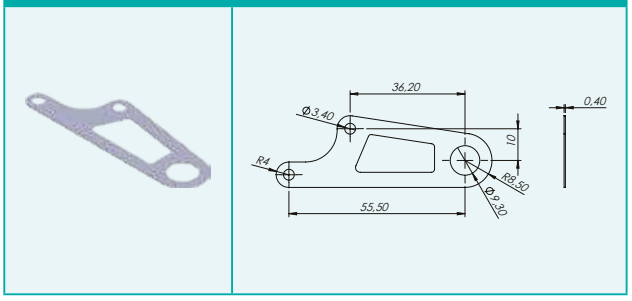

Encoder mounting attachments	Fixing components for hollow shaft encoders

Order Code : YY ASTK

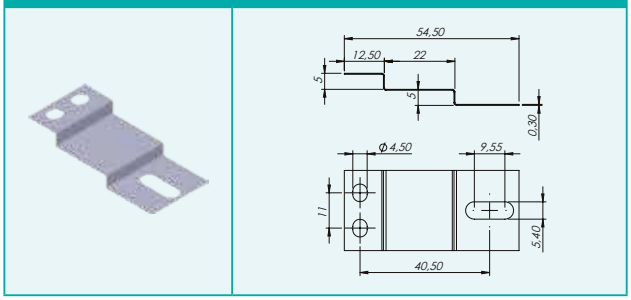

Order Code : YY SS

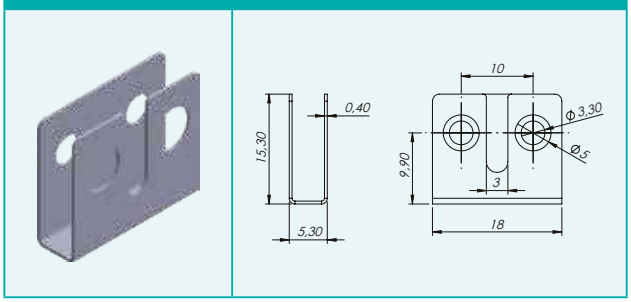

Order Code : YY KKBL

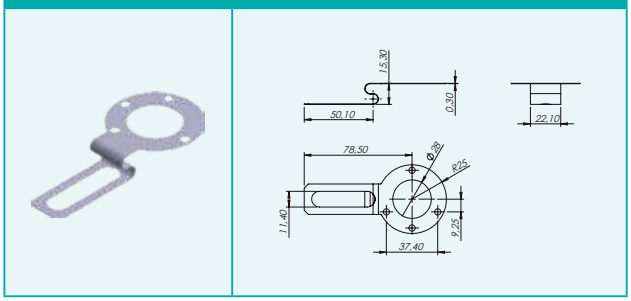

Order Code : YY KLM

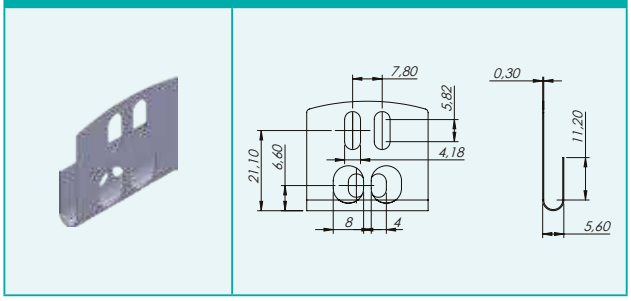

Order Code : YY MNT

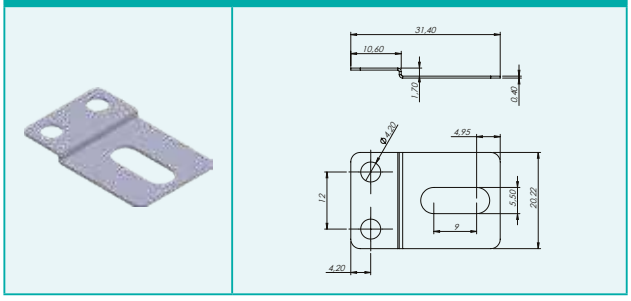

Encoder mounting attachments	Fixing components for hollow shaft encoders

Order Code : YY NGL20

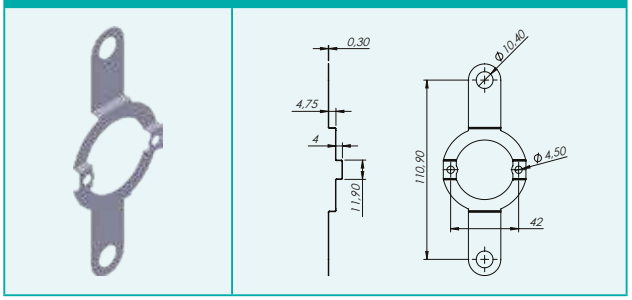

Order Code : YY NGL

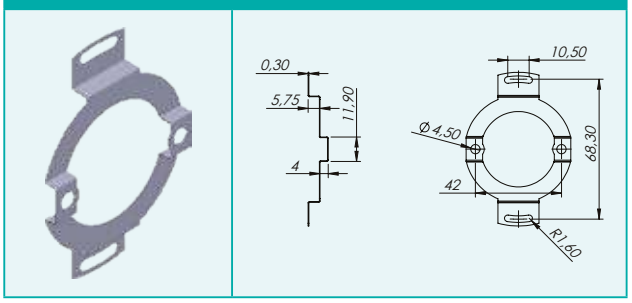

Order Code : YY SCRH

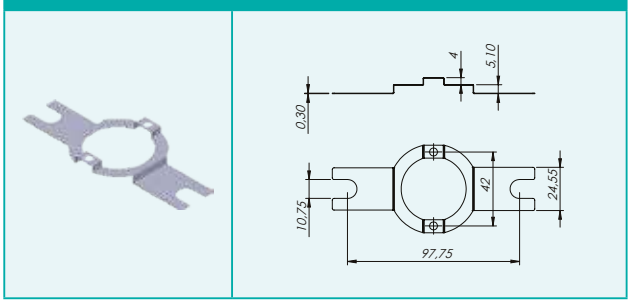

Order Code : YY SC38

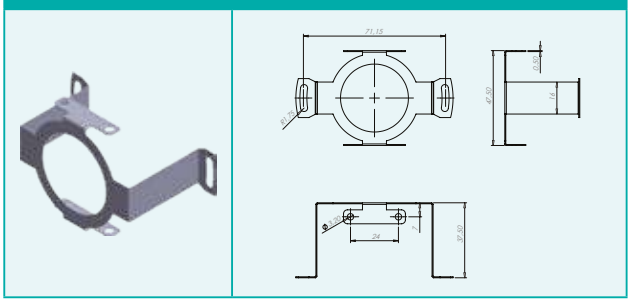

Order Code : YY SC34

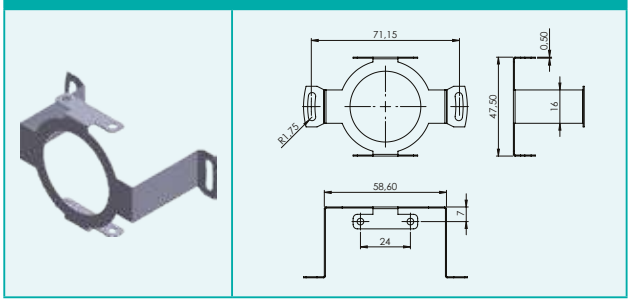

Encoder mounting attachments	Fixing components for hollow shaft encoders

Order Code : YY SC42

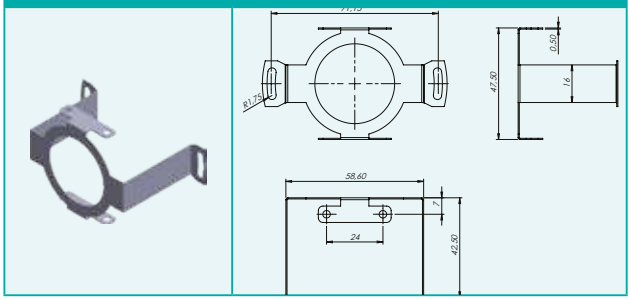

Order Code : YY SC8

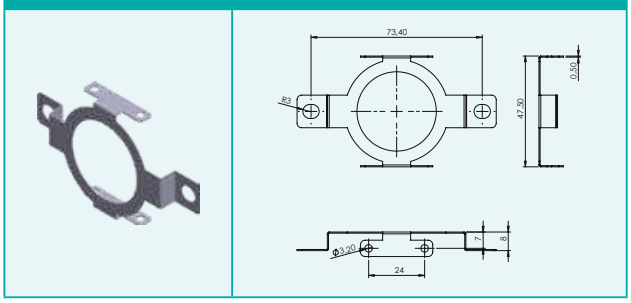

Order Code : YY DB

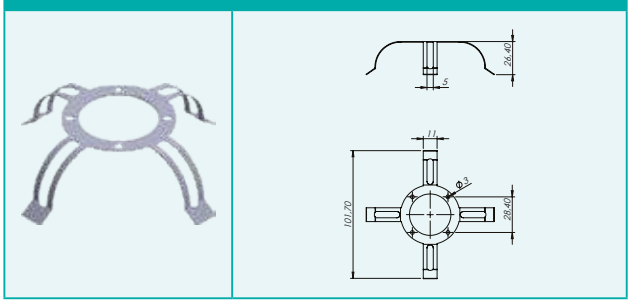

Order Code : YY SCBLZ

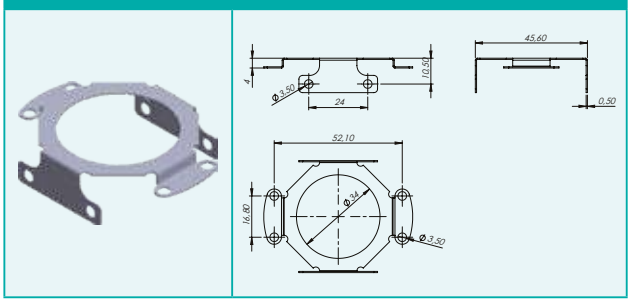

Order Code : YY TEO

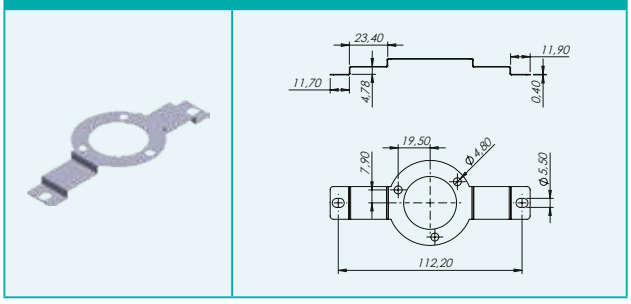

Coupling view	Drawing	Order Code

METAL COUPLINGS

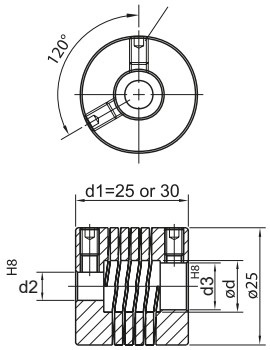

d2= 6, d3= 6	**MK250606**
d2= 6, d3= 8	**MK250608**
d2= 6, d3=10	**MK250610**
d2= 8, d3= 8	**MK250808**
d2=10, d3=10	**MK301010**
d2=11, d3=11	**MK301111**
d2=12, d3=12	**MK301212**
d2=10, d3=12	**MK301012**

PAGUFLEX COUPLINGS

PF26

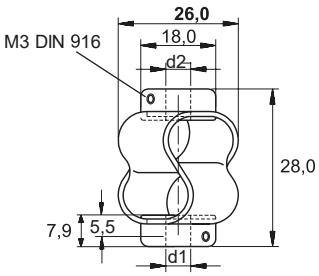

PF48

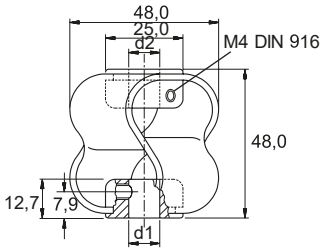

PF26, d1= 6, d2= 6	**PF260606**
PF26, d1= 8, d2= 8	**PF260808**
PF48, d1= 10, d2= 10	**PF481010**
PF48, d1= 10, d2= 12	**PF481012**

SPRING FLEX COUPLINGS

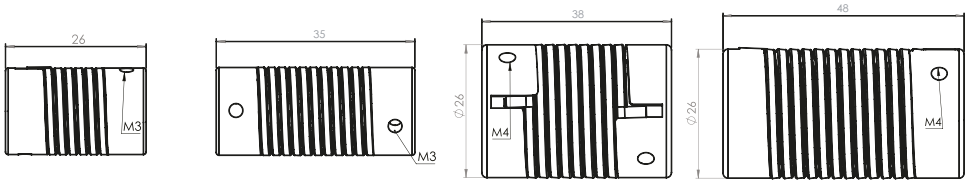

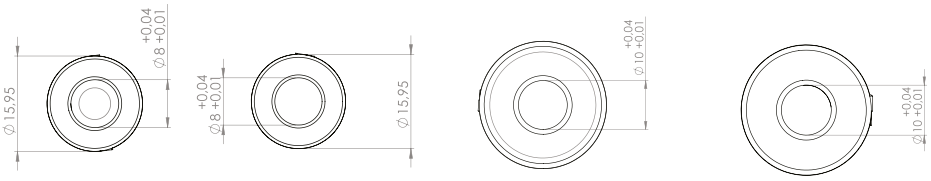

SPF L D d1d2	
L=26 D=16 d1= 6, d2=6	**SPF26160606**
L=26 D=16 d1= 8, d2=8	**SPF26160808**
L=35 D=16 d1= 6, d2=6	**SPF35160606**
L=35 D=16 d1= 8, d2=8	**SPF35160808**
L=38 D=26 d1= 8, d2=8	**SPF38260808**
L=38 D=26 d1= 10, d2=10	**SPF38261010**
L=48 D=26 d1= 10, d2=10	**SPF48261010**

ROTEX COUPLINGS

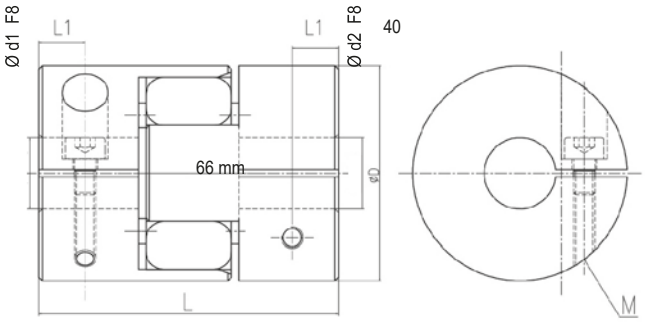

RTX66 d1= 14, d2= 14	**RTX661414**
RTX66 d1= 16, d2= 16	**RTX661616**
RTX66 d1= 18, d2= 18	**RTX661818**

Coupling view

PLASTIC COUPLINGS

Drawing

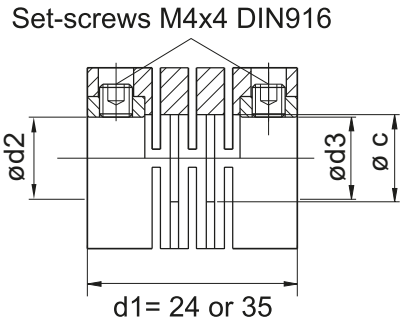

Order Code

d2= 6, d3= 6	**SK240606**
d2= 8, d3= 8	**SK240808**
d2=10, d3=10	**SK351010**

Wheel view

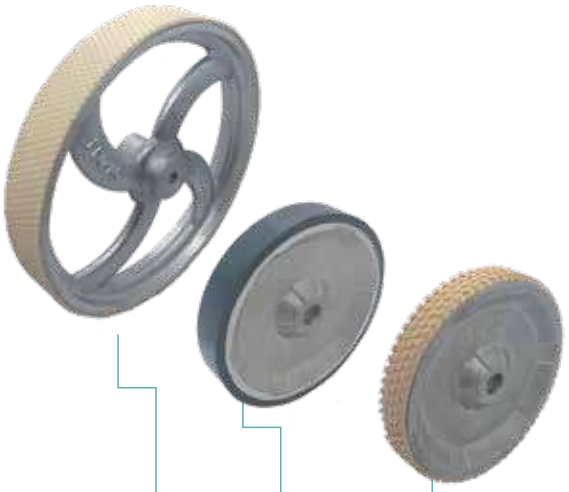

FC 250 MTK06

FC 250 MDK08

FC 500 MTK10

Drawing

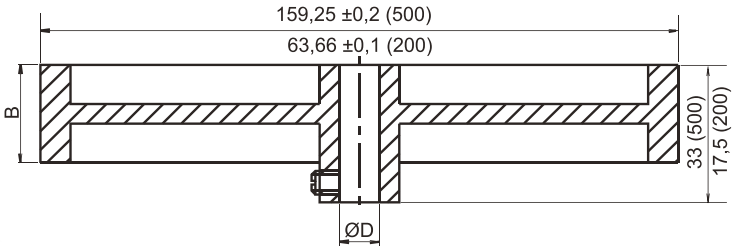

FC	500	M	T	K	08

Wheel Circumference
200: 200 mm
250: 250 mm
300: 300 mm
500: 500 mm

Body Type
M: Metal Body
P : Plastic Body

Surface Type
D : Flat Surface
T : Serrated Surface

Shaft Diameter
06: 6 mm
08: 8 mm
10: 10 mm

Surface Material
K: Rubber Surface
M: Metal Surface

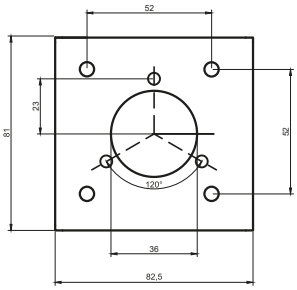

SF58B
Square flange

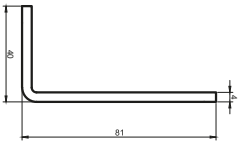

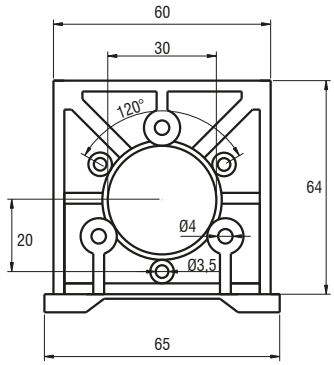

SF50B
Square flange

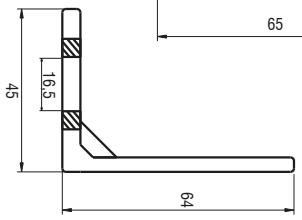

Ready-made shielded female cable connector for M12, M16 sensor connectors

Male Code	R 1204 / A 1204	R 1205 / A 1205	R 1208 / A 1208	R 1605 / A 1605
Male Photo				
Pin Connections	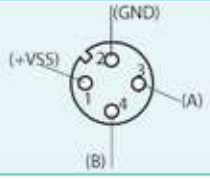	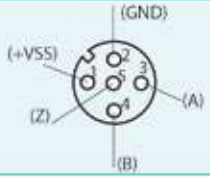	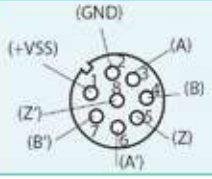	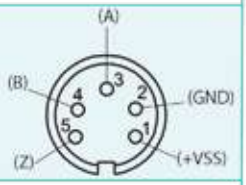
Female Cable Code	FCSF M1204	FCSF M1205	FCSF M1208	FCSF M1605
Cable Female Photo				
Cable Male Code	FCSM M1204	FCSM M1205	FCSM M1208	FCSM M1605
Cable Male Photo				

Male Code	R 1606 / A 1606	R 1607 / A 1607	R 1608 / A 1608	R 1614 / A 1614
Male Photo				
Pin Connections	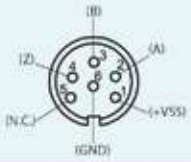	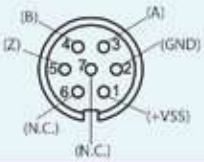	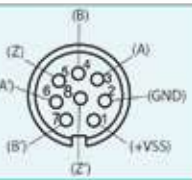	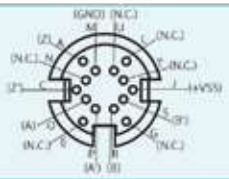
Female Cable Code	FCSF M1606	FCSF M1607	FCSF M1608	FCSF M1614
Cable Female Photo				
Cable Male Code	FCSM M1606	FCSM M1607	FCSM M1608	FCSM M1614
Cable Male Photo				

Ready-made shielded female cable connector for M23, M30 sensor connectors

Male Code	R 2312R / A 2312R	R 2312L / A 2312L	R 2019 / A 2019	R 2507 / A 2507
Male Photo				
Pin Connections	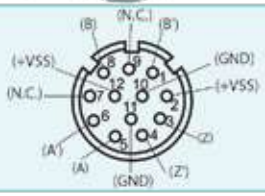	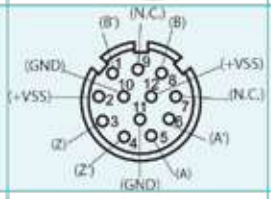	On Request	O. R.
Female Cable Code	FCSF M2312L	FCSF M2312R	FCSF M2019	FCSF M2507
Cable Female Photo				
Cable Male Code	FCSM M2312L	FCSM M2312R	FCSM M2019	FCSM M2507
Cable Male Photo				

Male Code	R 3007 / A 3007	R 3010 / A 3010	R 3017 / A 3017	MDS9
Male Photo				
Pin Connections	O. R.	O. R.	O. R.	
Female Cable Code	FCSF M3007	FCSF M3010	FCSF M3017	FCSF DS9
Cable Female Photo				
Cable Male Code	FCSM M3007	FCSM M3010	FCSM M3017	
Cable Male Photo				

Installation kit for FNC 50H & FNC 58B Series Encoder

FNC 58B MK10M08

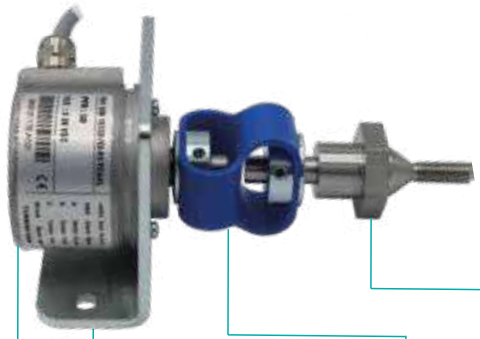

FNC 58B

FNC 50H MK10M08

FNC 50H

SQUARE FLANGE 58B

PAGUFLEX COUPLINGS

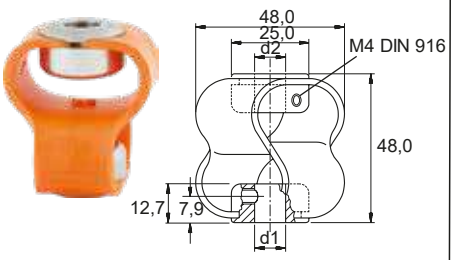

SPRING FLEX COUPLINGS

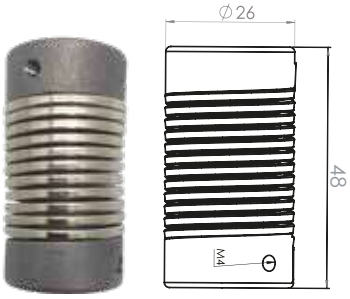

SA10M08L20

SA10M10L20

SA10M12L20

SA10M08L50

Kit Part Number

FNC	58	B	MK	10	M10

FENAC Automation Control

Technical

- Optics
- Electronics
- Mechanics

Optical Principle

FENAC Optical Incremental Encoders are based on non-contact optical scanning. A paralel IR light beam is produced from a collimated light source which is formed by an IR Led and a collimator lens. The light is passing from a mask and a code disc to reach an optical detector. When the disc rotates, optically dark and light regions appear on optical detector's active areas. So rotation is transformed to an electrical information which is based whether light is passing from a code disc or interrupted by a code disc. So two signals that has a 90° phase shift is produced as well as a zero reference signal. Optical detector is a photo-diode array, working differentially to eliminate common mode noise effects. Then highprecision signals are amplified for industrial use. Outputs are either Push-Pull or Line Driver square waves and their inverter signals.

FENAC Incremental Encoders consists of precision optical assembly, robust mechanics and high-performance electronics to achieve low noise precision output signals.

Phase Error

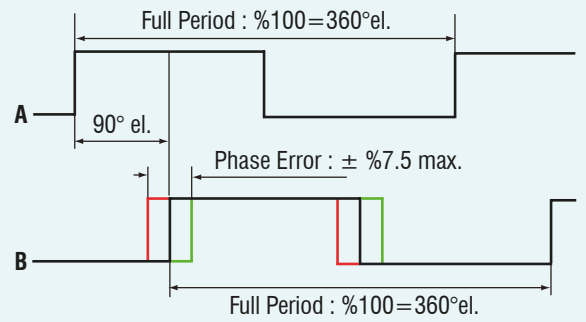

Magnetic Principle

FENAC Magnetic Incremental encoders are based on non-contact magnetic scanning principle. A diametrical magnetised magnet is mounted in stainless steel shaft. As the encoder rotates, changing magnetic field is sensed by an Hall-Effect IC and and voltages that are induced by magnetic field are converted to 90° phase shifted square waves. Then high-precision signals are amplified for industrial use. Outputs are either Push-Pull or Line Driver square waves and their inverter signals.

Pulse Width Error

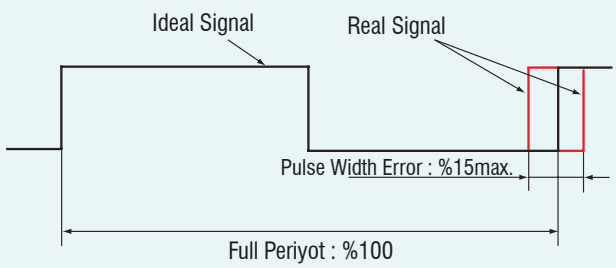

Optics

- Light Source: IR-LED
- Optoelectronis life: 100.000 hours
- Scanning: differential

Logic Pulse Width Error

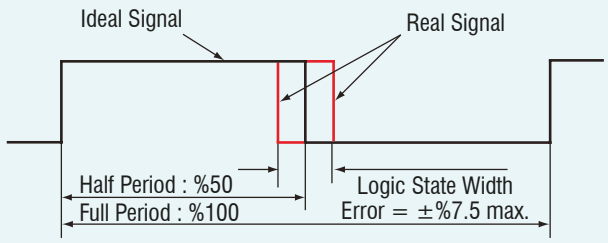

Error Components

Error components of rotary encoders are described in three sections which are phase error, pulse width error and logic pulse width error. Maximum errors are illustrated as follows.

Mechanical Parts

All FENAC encoders consists of a high precision mechanics including two shaft bearings. Bearings are capable of withstanding high speed and load and featuring long-term load capacity. The lifetime of bearing is 10^9 revolutions which is a minimum value, actual value may be higher surely. Lifetime in hours can be evaluated by following Formula

$$\text{Lifetime (hours)} = \frac{\text{Number of resolution}}{\text{RPM} * 60}$$

Maximum Operating Speed

The maximum operaing speed is limited by number of pulses per revolution, maximum output frequency of electrical circuit and maximum mechanical operating speed. The maximum speed can be expressed as follows.

$$\text{Max. operating speed} = \frac{\text{Max. output frequency of encoder in Hz.} * 60}{\text{PPR of encoder}}$$

Double bearing lock system

Fenac encoders designed according to double bearing lock system which ensures high radial and axial shaft loadings. Maximum distance and quality bearings increase the strenght of the mechanical parts. In this way encoder becomes more robust against vibration and installation errors.

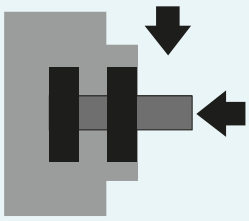

Protection from Noise Interference

For proper operation to get rid of noise effects, we recommend the following measures.

• It is recommended to wire the shield of encoder cable to earth potential. The entire system must be grounded at one signal location to avoid ground loops.

• The connecting cables should be shielded and should be kept away from power lines and other noise generating equipments.

• Sources of interference such as motors, solenoid valves, frequency converters etc should always have their noise suppressed at

• Encoders should not be powered from the same mains supply as solenoid valves or contactors, as this may cause interference.

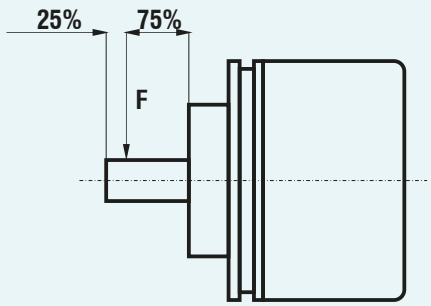

Technical definitions

Absolute encoders provide current position for output by digital serial or parallel data interface without need of reference signal. Actual position of encoder is stored by the encoder by the help of gear or battery solution.

Optical absolute encoders identify a code on a glass disc. High performance Opto ASICs with integrated monitoring and diagnostic verifies every position value in realtime. Adaptation of signals than obtained multi-layer electronics circuits.

Magnetic abosulte encoders provide exact position value without need of glass disc and using magnetic ASICs which make them more robust to shock and vibrations.

Code types

Absolute position information is sent to receiver electronics by means of binary or gray coded data. The gray code is a single step code which ensures that from one position to next only one bit changes while change from one position to next for binary code result to changes more than one bit. This may cause wrong position information. That is why gray coded position information is more preferable.

Binary code

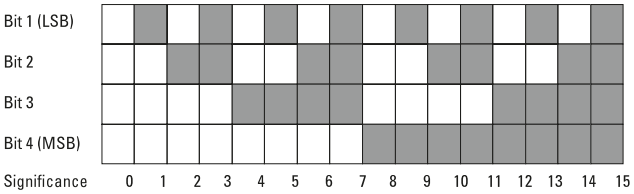

Gray code

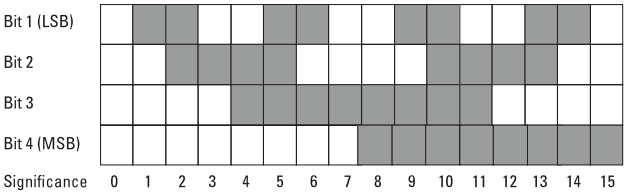

SSI data transmission

Terminal significance

+VB	Encoder voltage supply.
GND	Encoder ground connection relating to UB.
DATA+	Positive, serial data output of differential linedriver.
DATA-	Negative, serial data output of differential linedriver.
CLK+	Positive SSI clock input. Clock + together with clock-forms a current loop.
CLK-	Negative SSI clock input. Clock - together with clock + forms a current loop.
ZERO SET	Input for setting a zero point anywhere within the programmed encoder resolution. The zero setting is standart on Low and triggered by a High impulse over 100 ms duration
DIRECTION	Input for setting counting direction. This input is standart Low and triggered by a High impulse. Direction is counter-clockwise on standart, when high impulse applied it becomes clockwise

Pulse Diagram

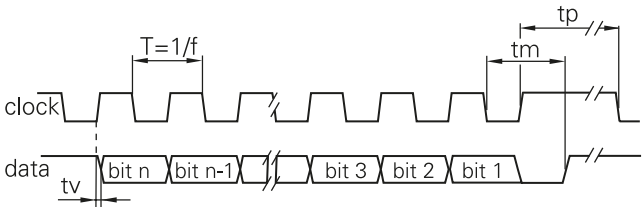

Clock frequency, f	50...2000 kHz for SSI up to 10MHz for BISS
Code	Binary or gray
Status and parity bit	On request
Monoflop time tm	>15µs
Clock time out	Programmable at factory

FENAC WIRE UNITS FAMILY

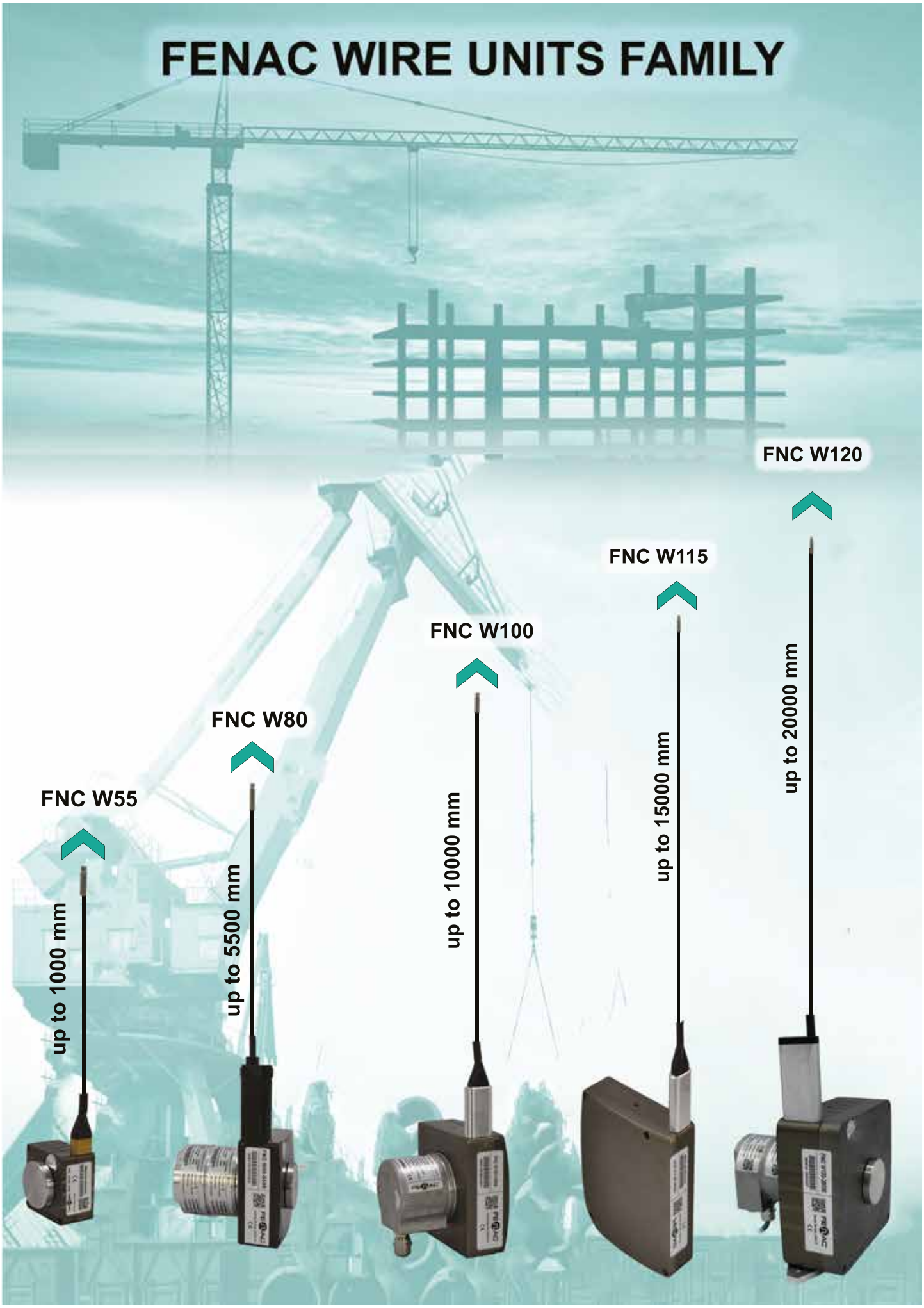

World of quality encoders

Represented by:

FENAC MÜHENDİSLİK SAN. TİC. LTD. ŞTİ.
Ferhatpaşa Mah. 35. Sok. No. 20 Ataşehir 34888 - İstanbul - Turkey
Tel/Phone : +90 216 232 27 00 Faks/Fax : +90 216 661 10 22
www.fenac.com.tr
info@fenac.com.tr

ISO9001 : 2015 Cert No : 19-224-1122

Basım Yeri : Narfen matbaacılık Reklam Ambalaj Sanayi ve Ticaret Ltd. Şti. / 0282 758 16 99 Çerkezköy / 30.10.2015