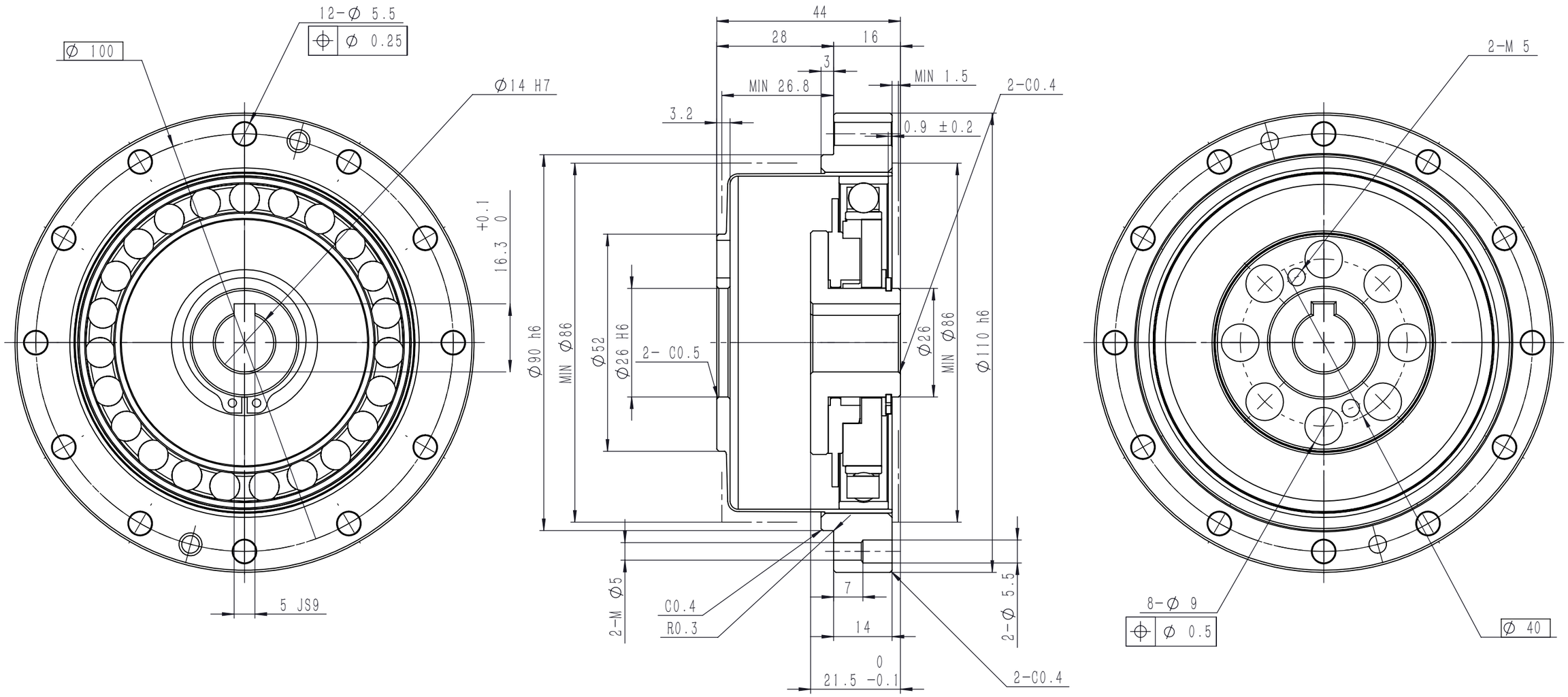

Specification:

Model	Reduction ratio	Rated torque at input 2000r/min (Nm)	Permissible peak torque at start/stop (Nm)	Permissible max. value of ave. load torque (Nm)	Instantaneous permissible max. torque (Nm)	Permissible max. input rotational speed (r/min)	Permissible ave. input rotational speed (r/min)	Back clearance (arc sec)	Transmission accuracy (arc sec)
								≤	≤
32	50	89	253	126	448	4500	3500	20	60

HMCS-32-50-I

Han's Motion