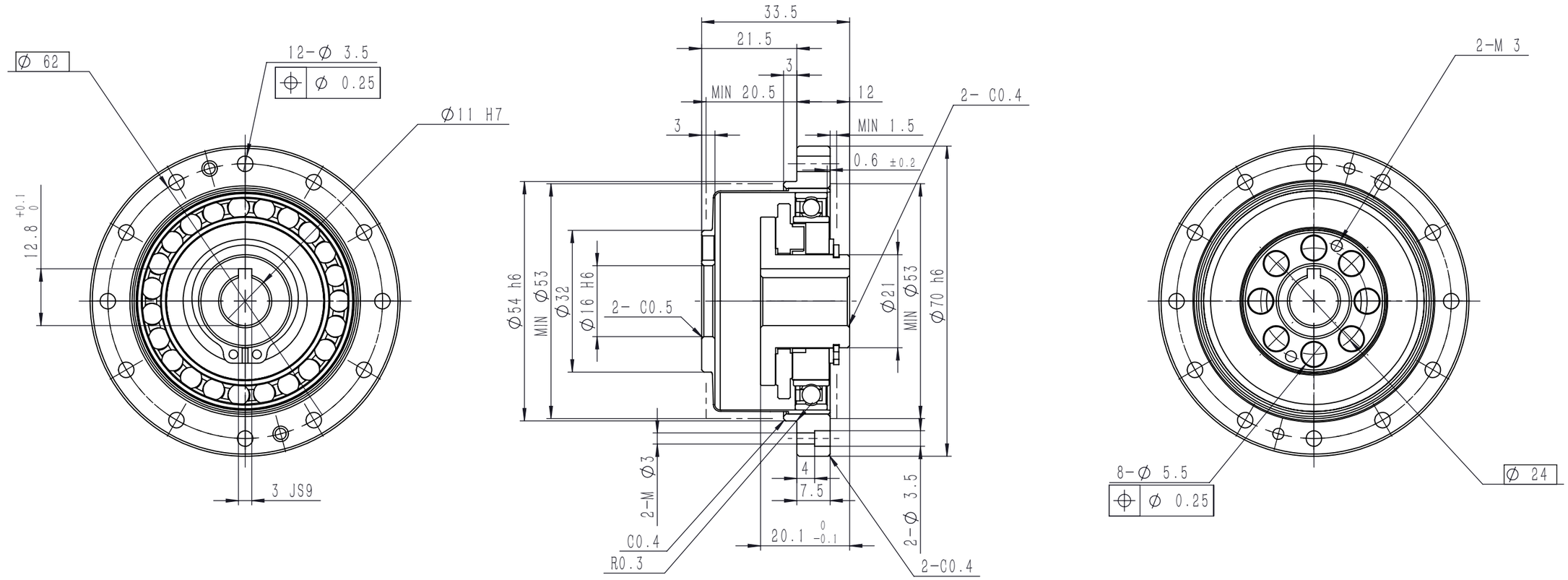

Specification:

Model	Reduction ratio	Rated torque at input 2000r/min (Nm)	Permissible peak torque at start/stop (Nm)	Permissible max. value of ave. load torque (Nm)	Instantaneous permissible max. torque (Nm)	Permissible max. input rotational speed (r/min)	Permissible ave. input rotational speed (r/min)	Back clearance (arc sec)	Transmission accuracy (arc sec)
								≤	≤
20	80	40	87	55	149	6000	3500	20	60

HMCS-20-80-I

Han's Motion